FPGA ROD Implementation Model #2

Atlas - Wisconsin Group

Khang Dao, Damon Fasching, Richard Jared,

John Joseph, Mark Nagel, Linda Stromburg and

Lukas Tomasek

January 27, 2000

Model #2 96Link ROD Event DataPath

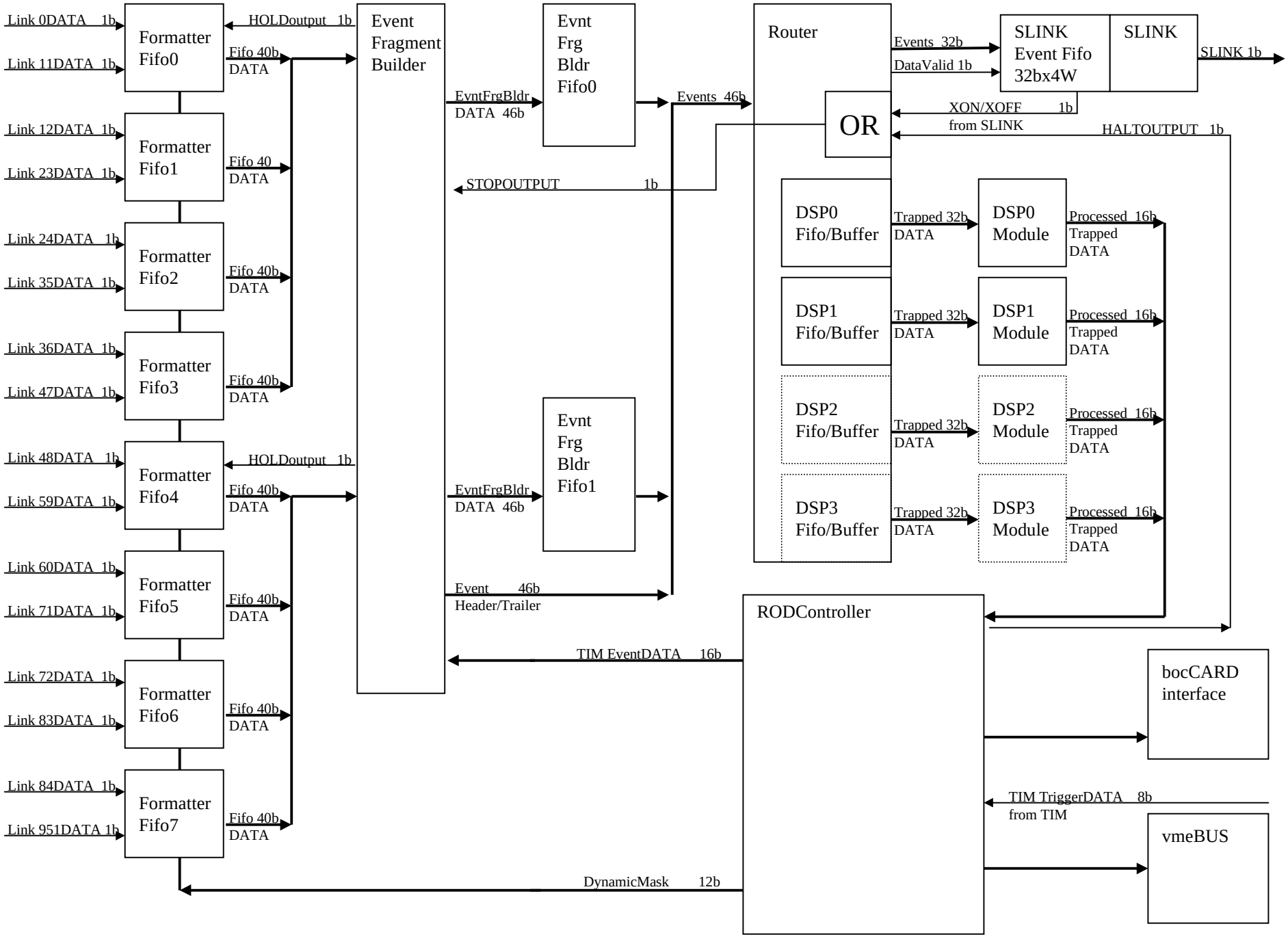

NOTE: Some signals have been omitted for clarity

Model #2 96Link ROD DebugPath

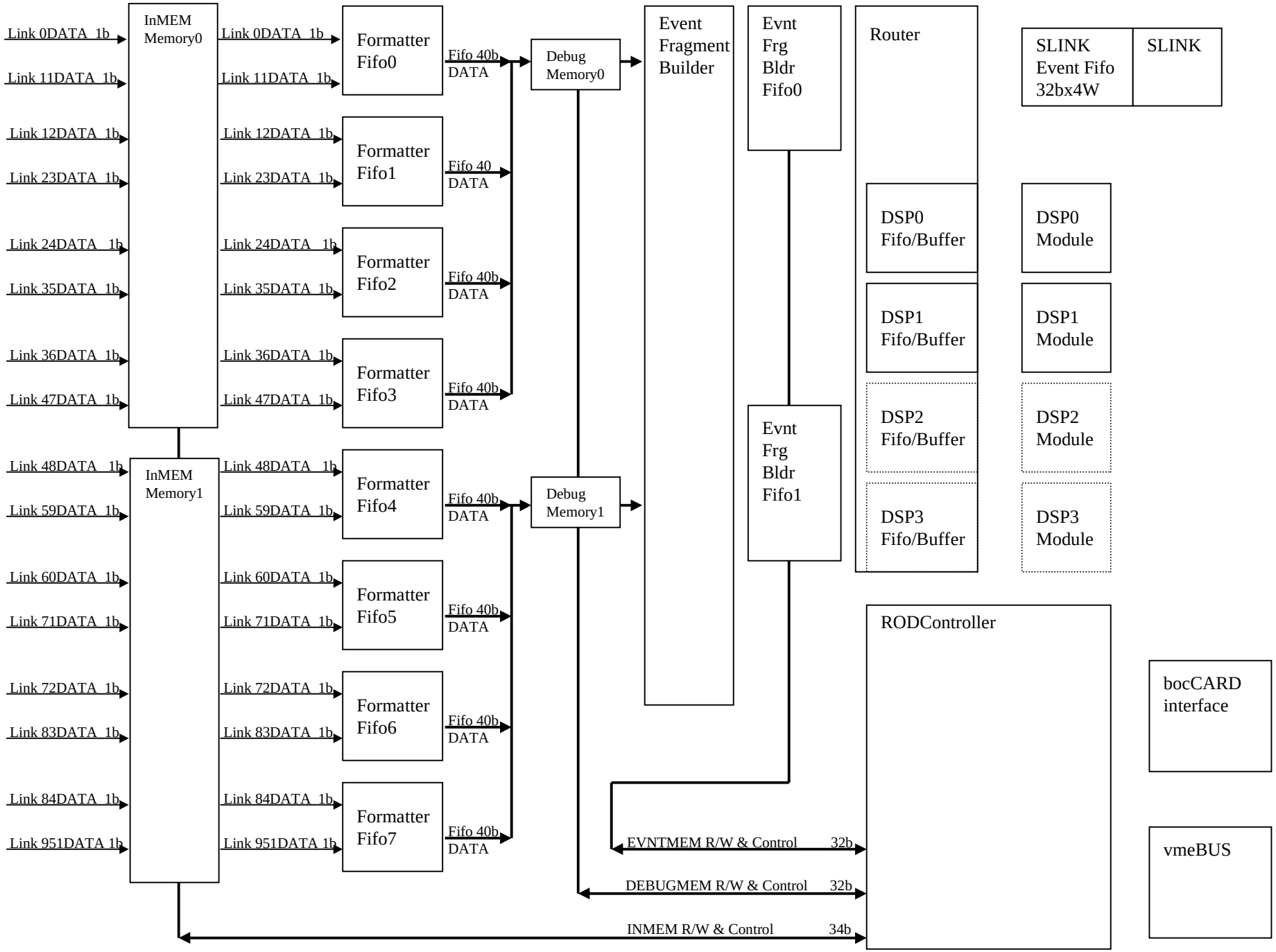

NOTE: Some signals have been omitted for clarity

Model #2 96Link ROD ControlPath

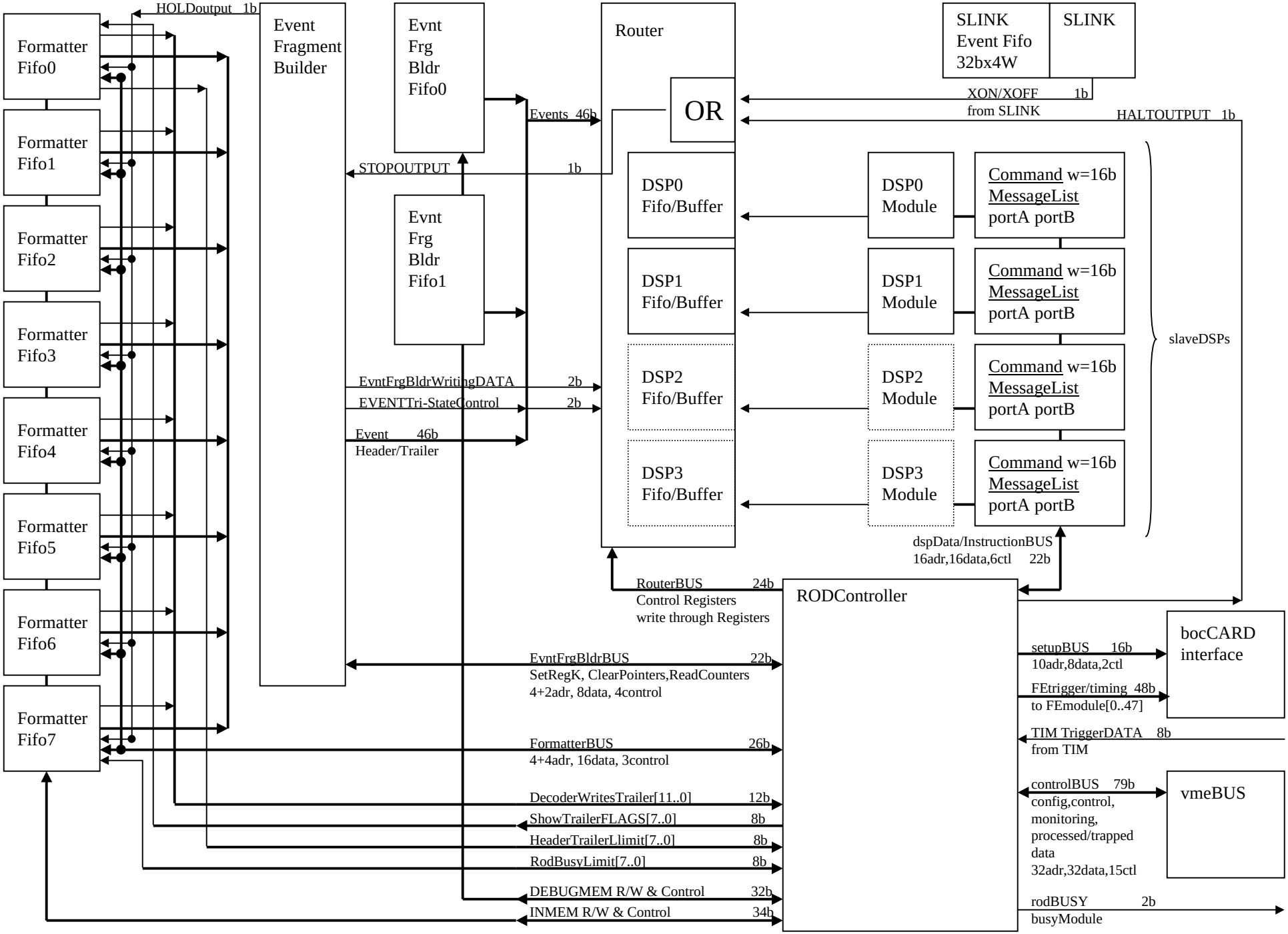

NOTE: Some signals have been omitted for clarity

FPGA ROD Implementation Model #2 Formatter/Fifo

Atlas - Wisconsin Group

Khang Dao, Damon Fasching, Richard Jared,

John Joseph, Mark Nagel, Linda Stromburg and

Lukas Tomasek

January 27, 2000

Model #2 Formatter FPGA

Note: XCV400fg-5 4800 20

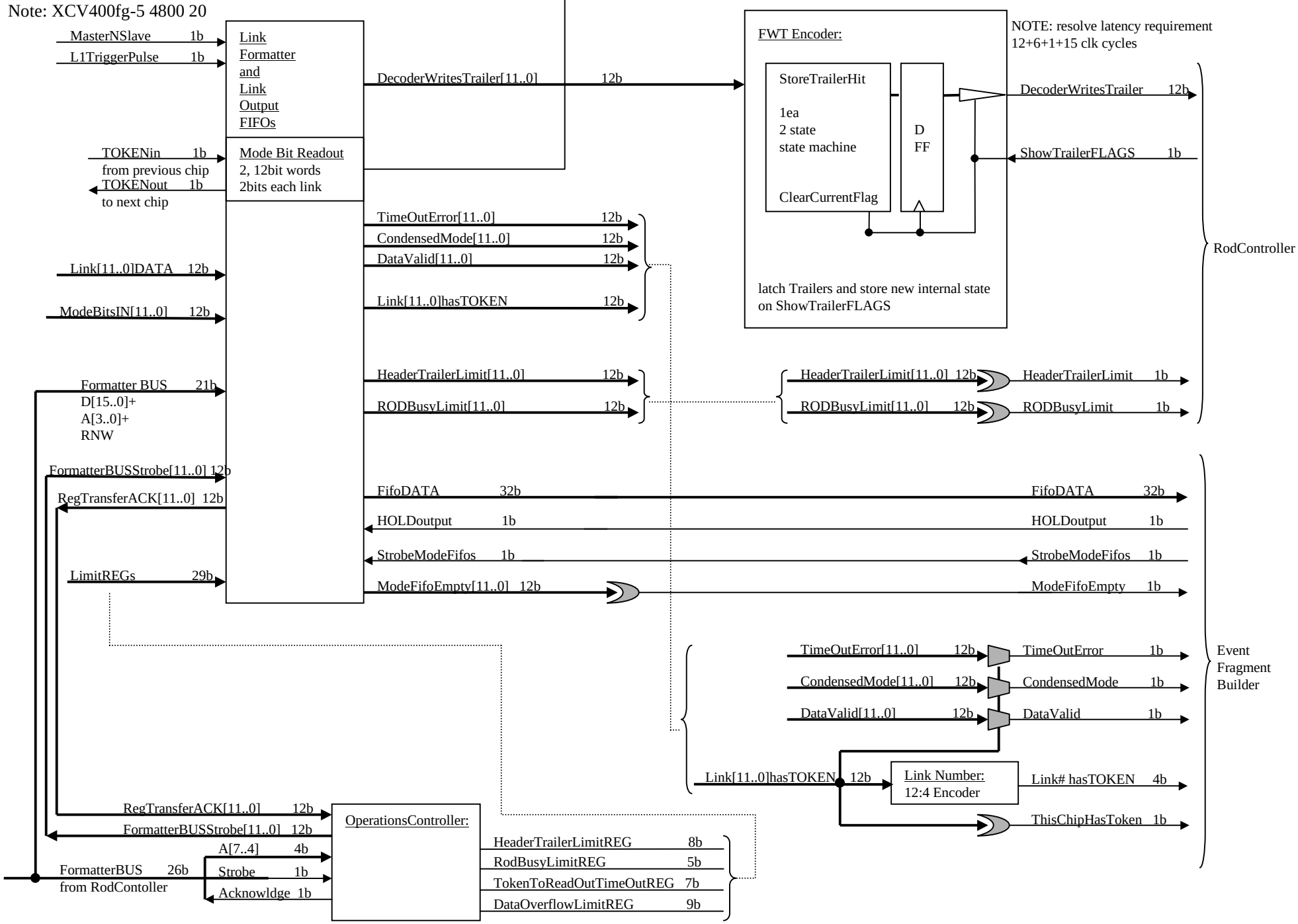

Model #2 Formatter FPGA: Link Formatter and Link Output FIFO

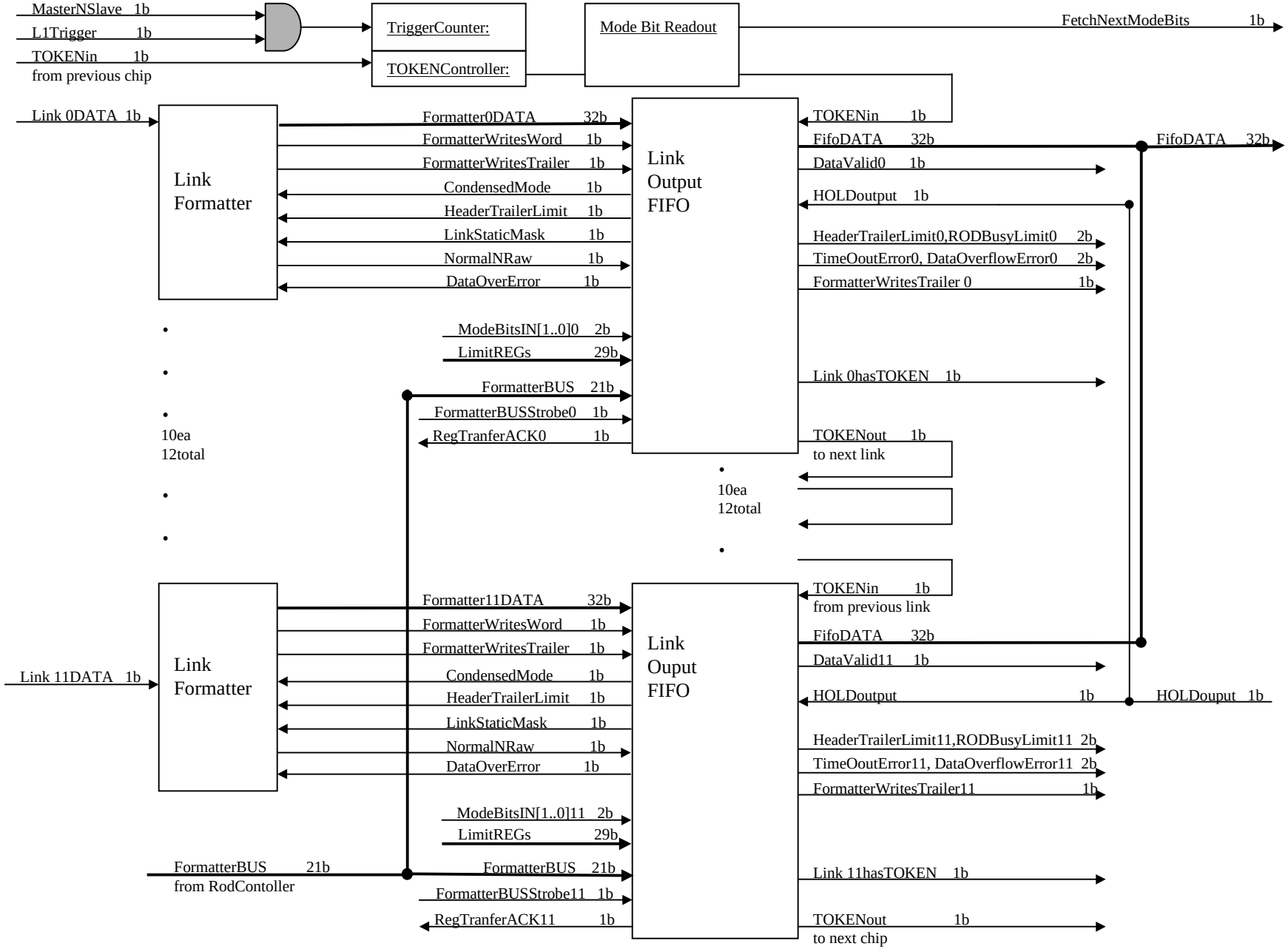

Model #2 Formatter FPGA: Link Formatter

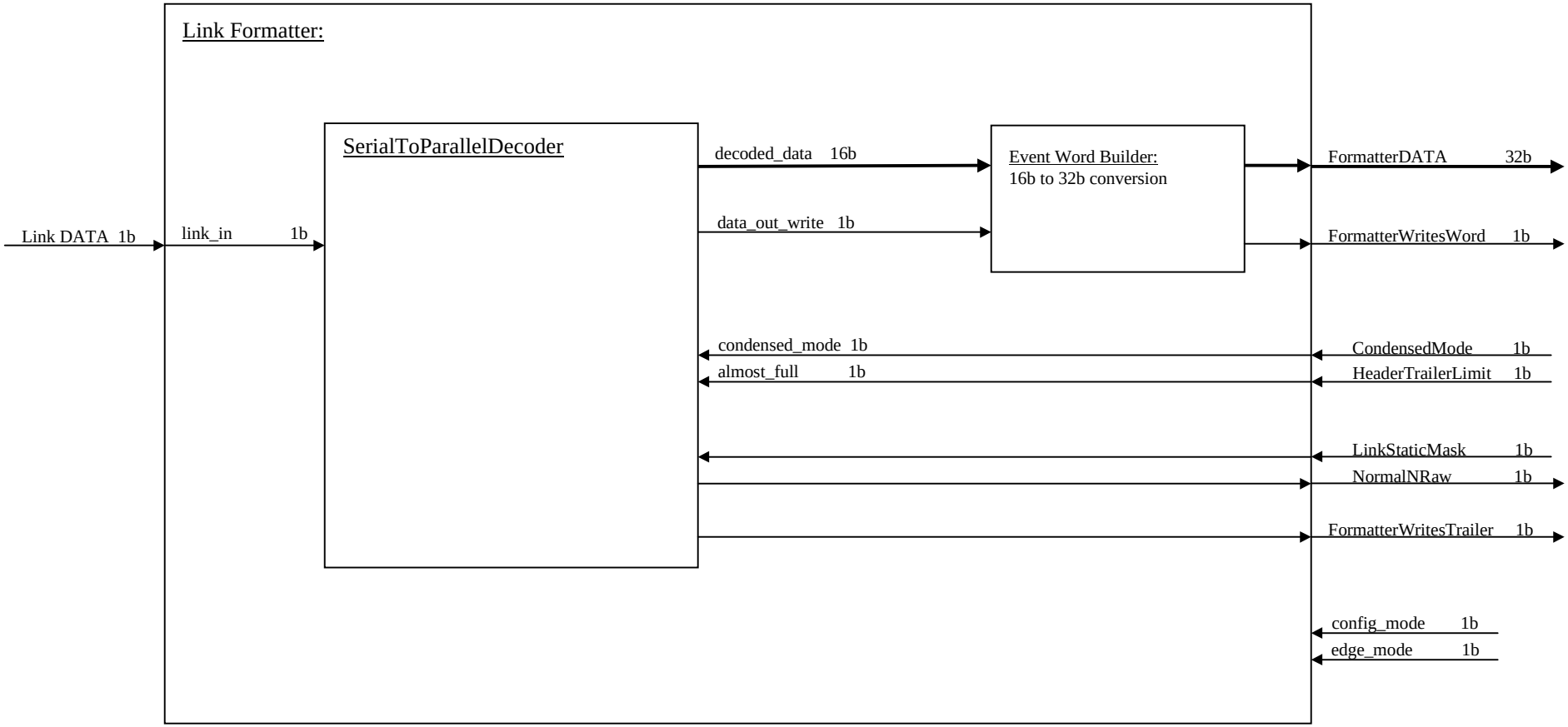

Model #2 Formatter FPGA: Link Output FIFO

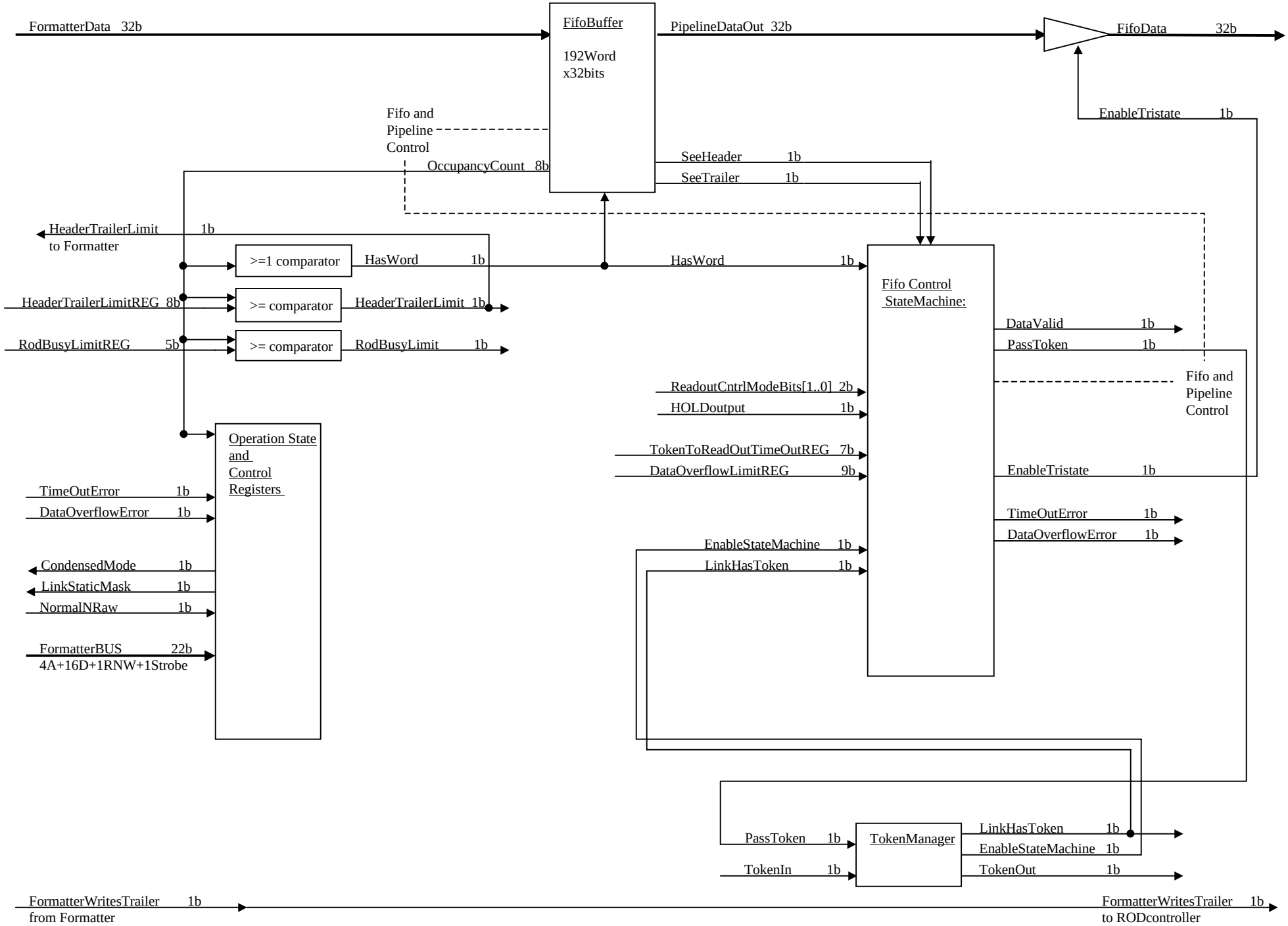

Model #2 Formatter FPGA: FIFO Control StateMachine and Signals

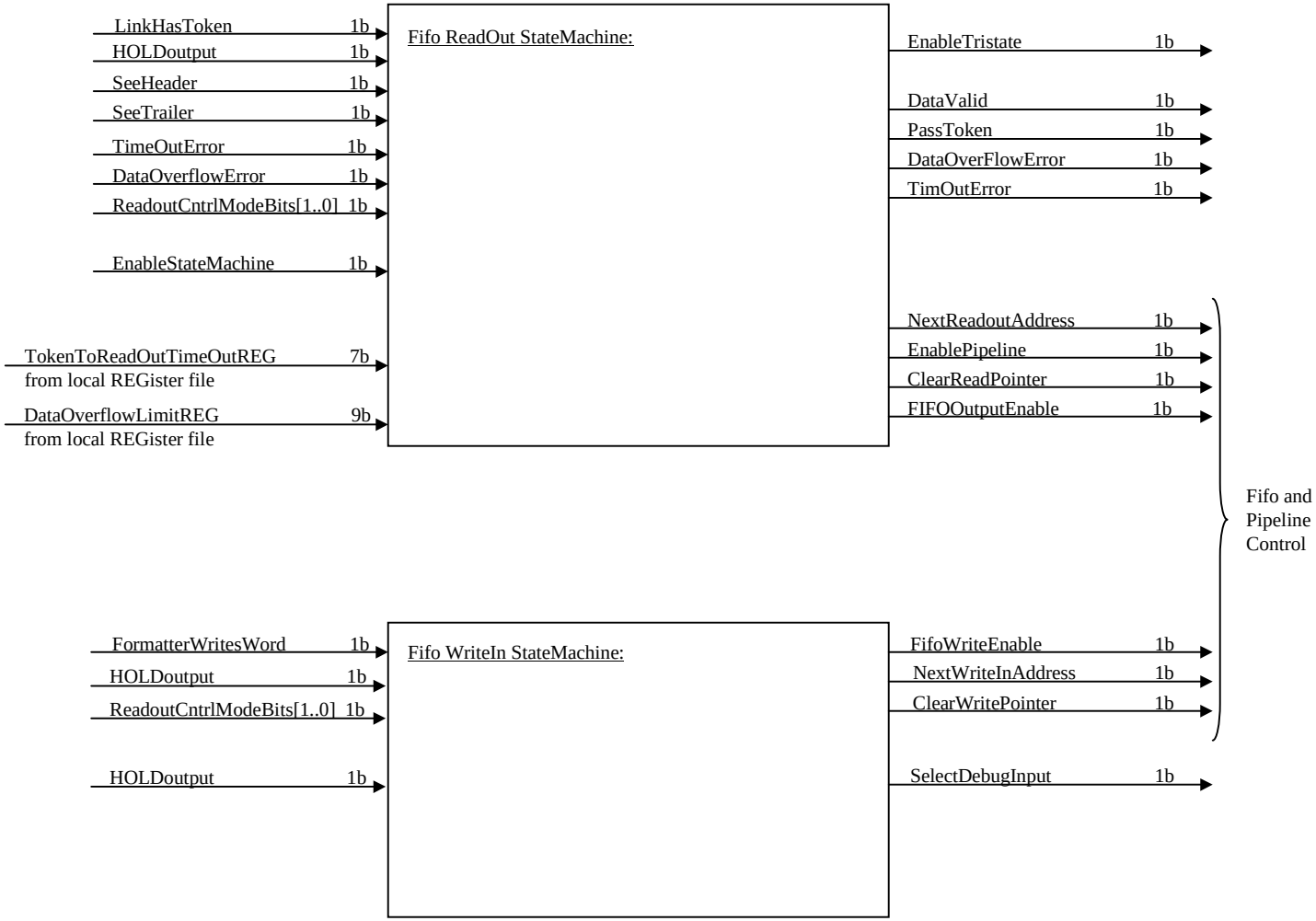

Model #2 Formatter FPGA: FIFO StateMachine Structure

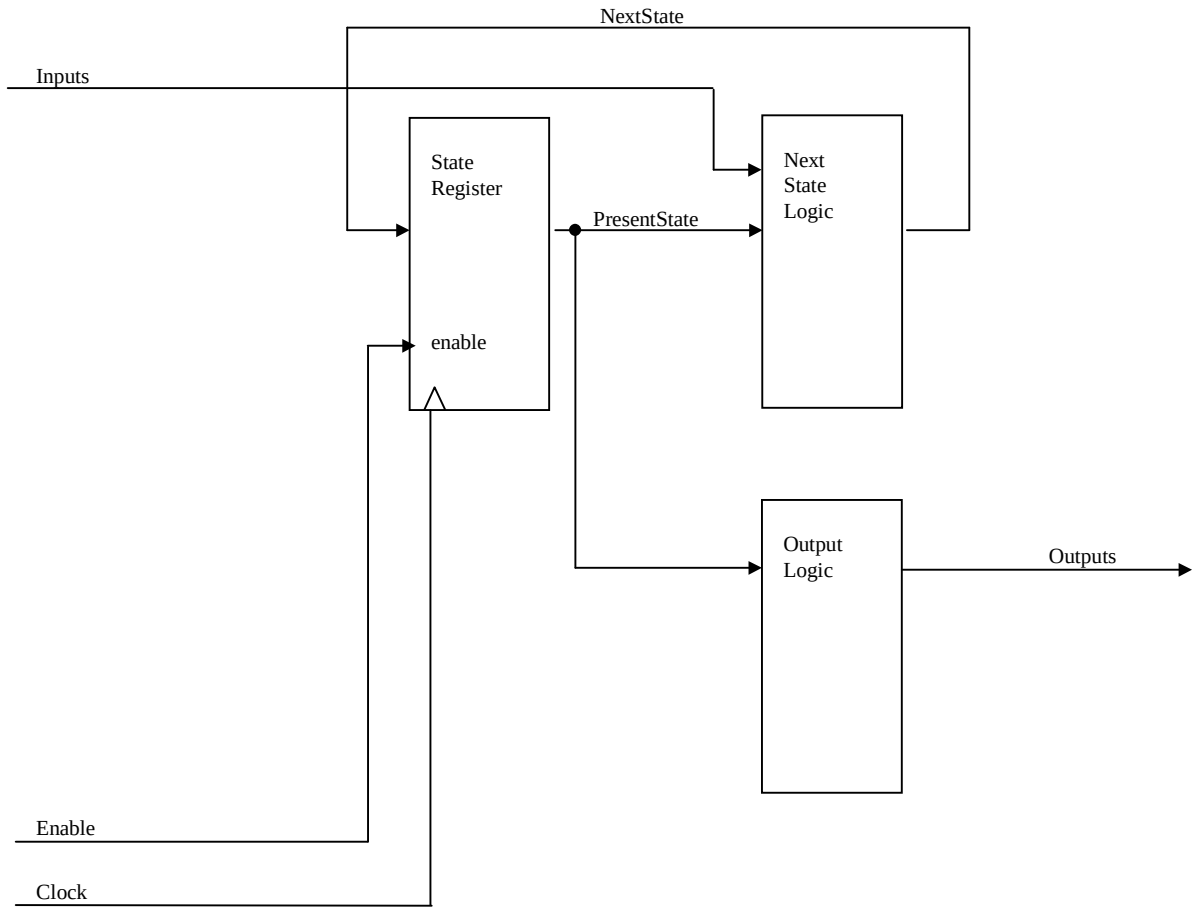

Model #2 Formatter FPGA: FIFO ReadOut StateMachine and Signals

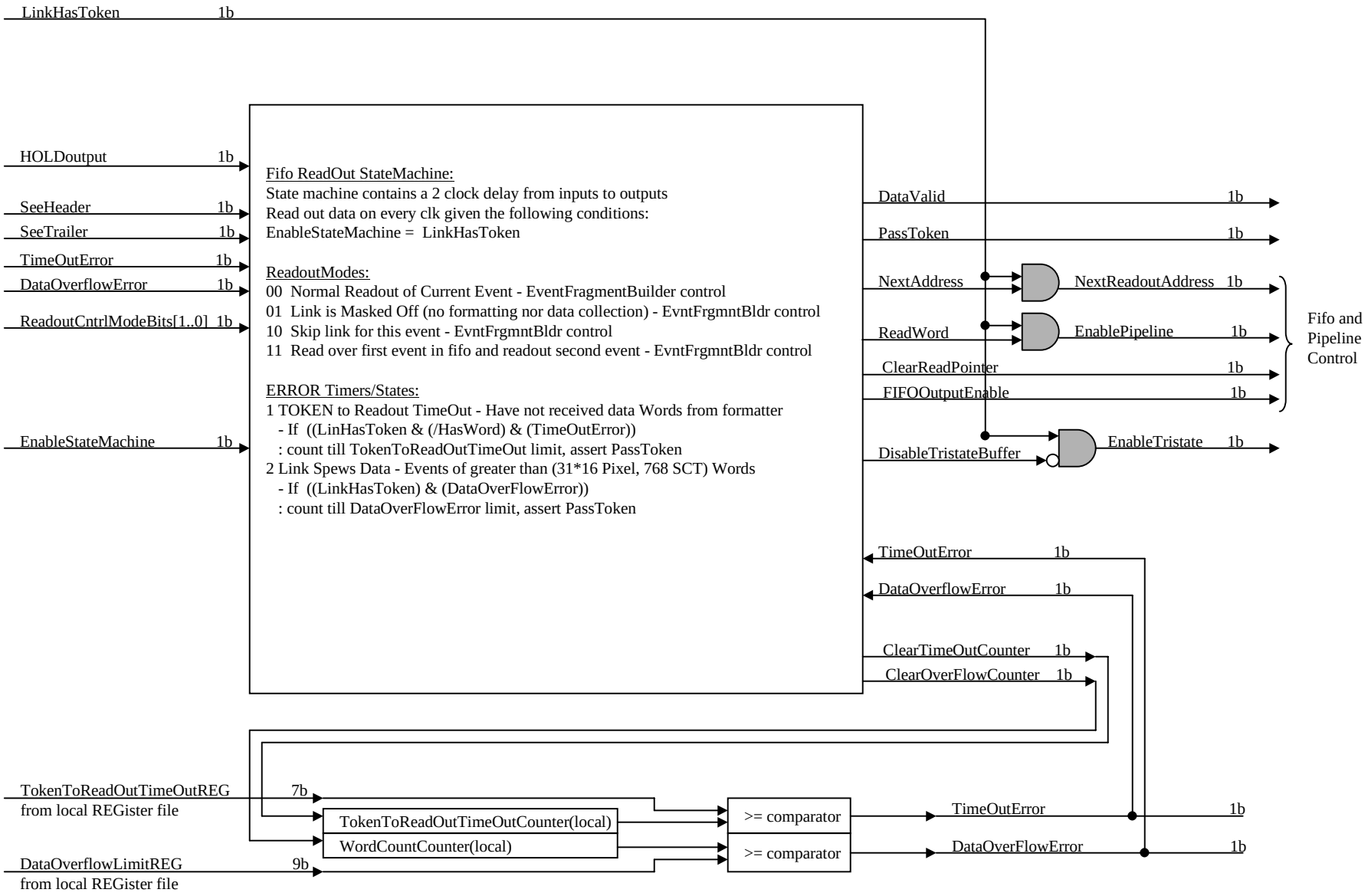

Model #2 Formatter FPGA: FIFO ReadOut StateMachine State Diagram

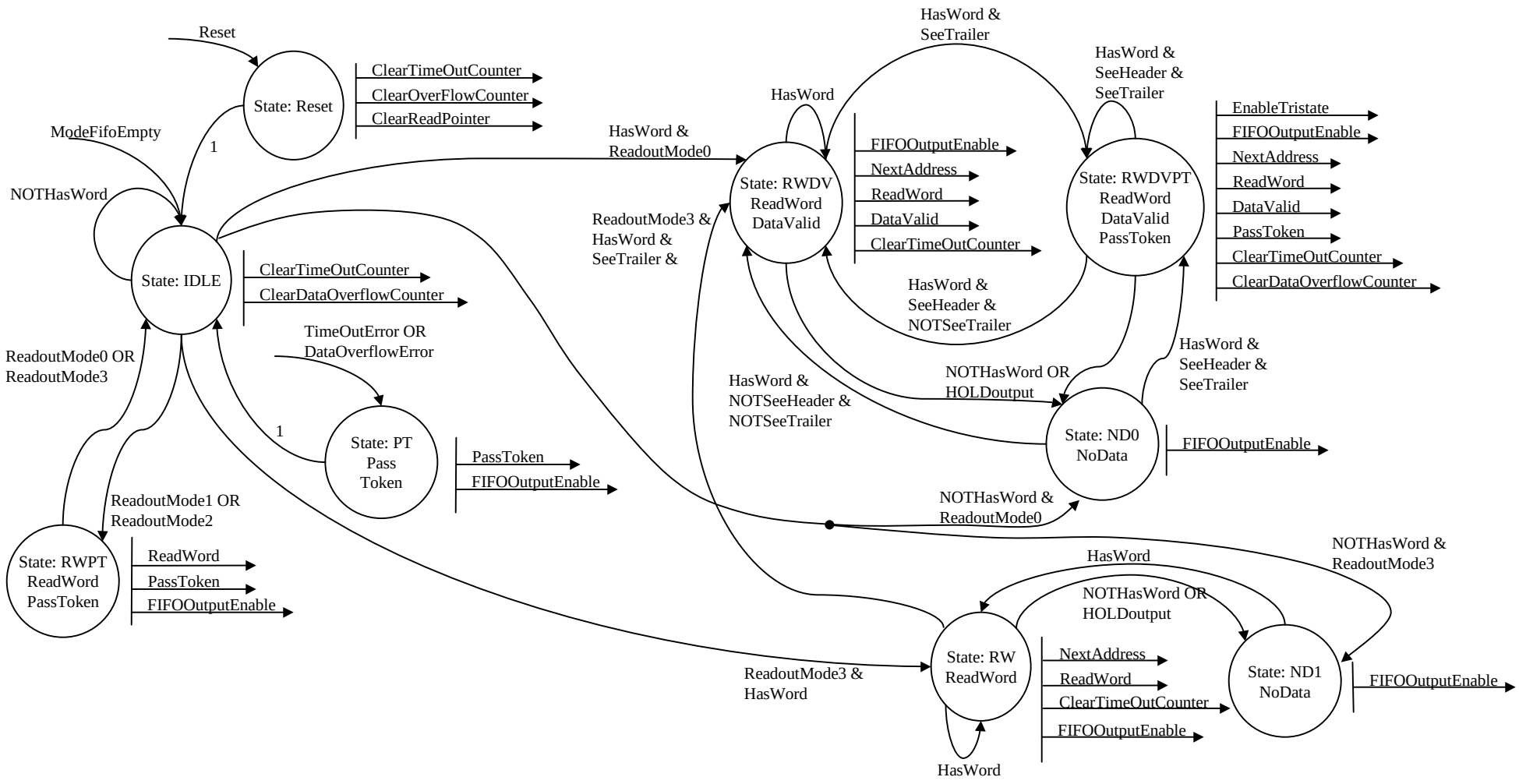

Model #2 Formatter FPGA: FIFO WriteIn StateMachine and Signals

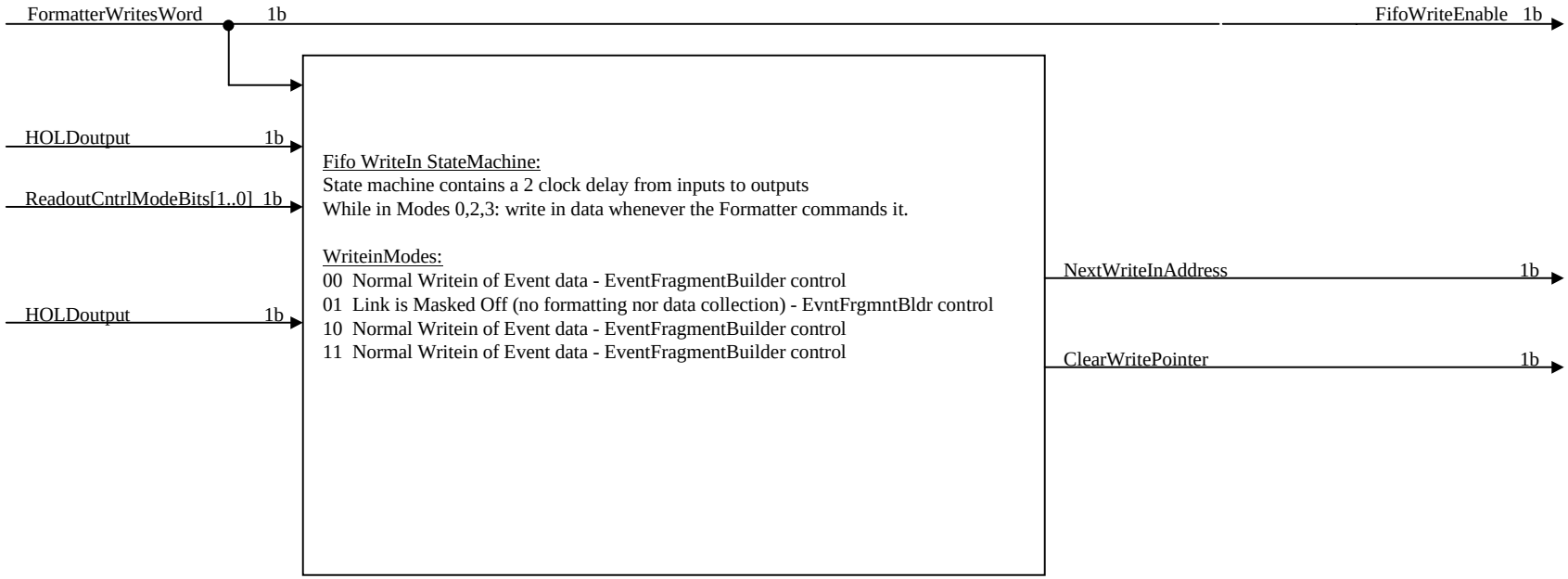

Model #2 Formatter FPGA: FIFO WriteIn StateMachine State Diagram

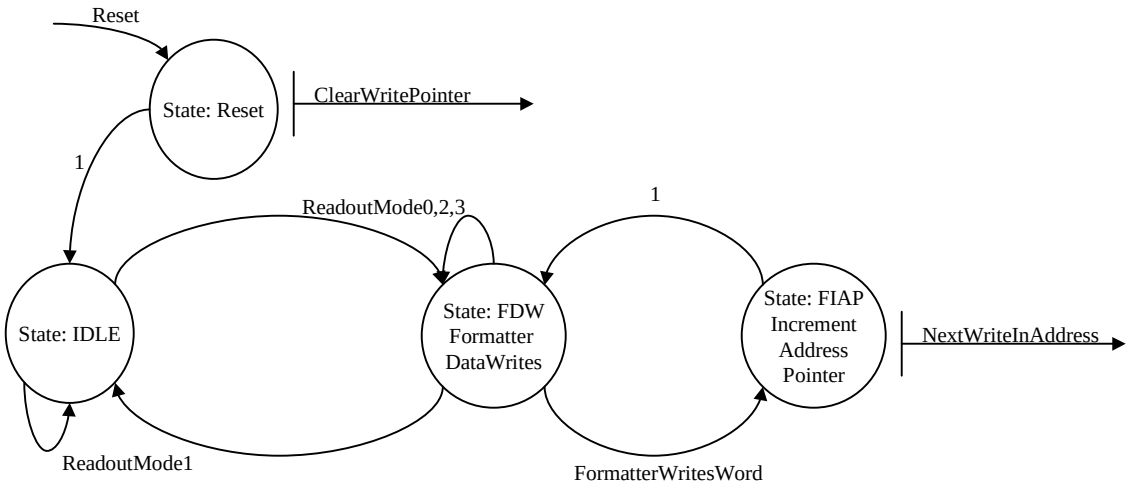

Model #2 Formatter FPGA: Operation State and Control Registers Block

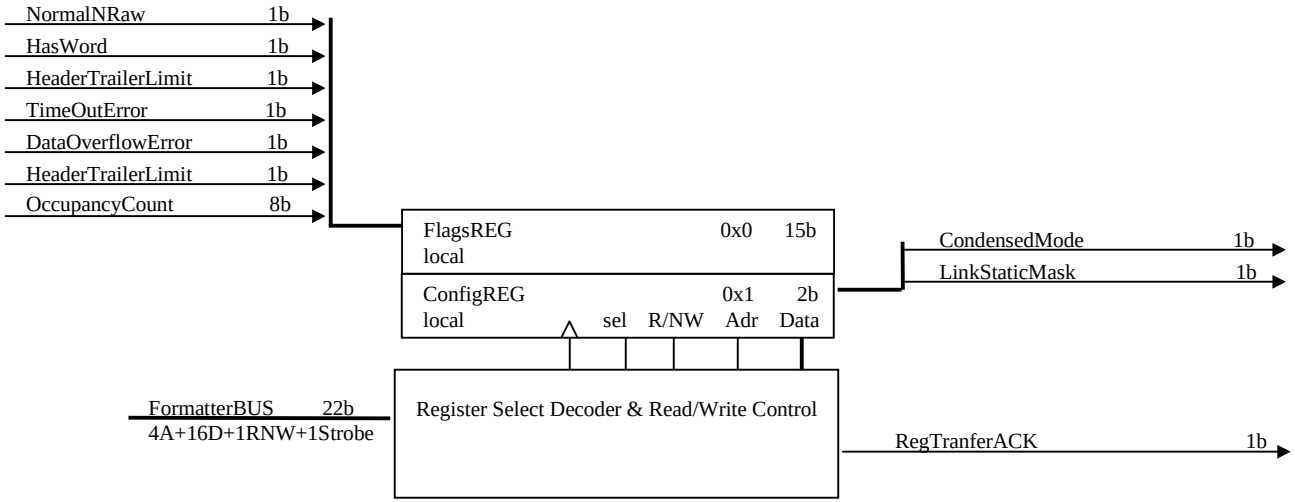

Model #2 Formatter FPGA: FIFO Buffer

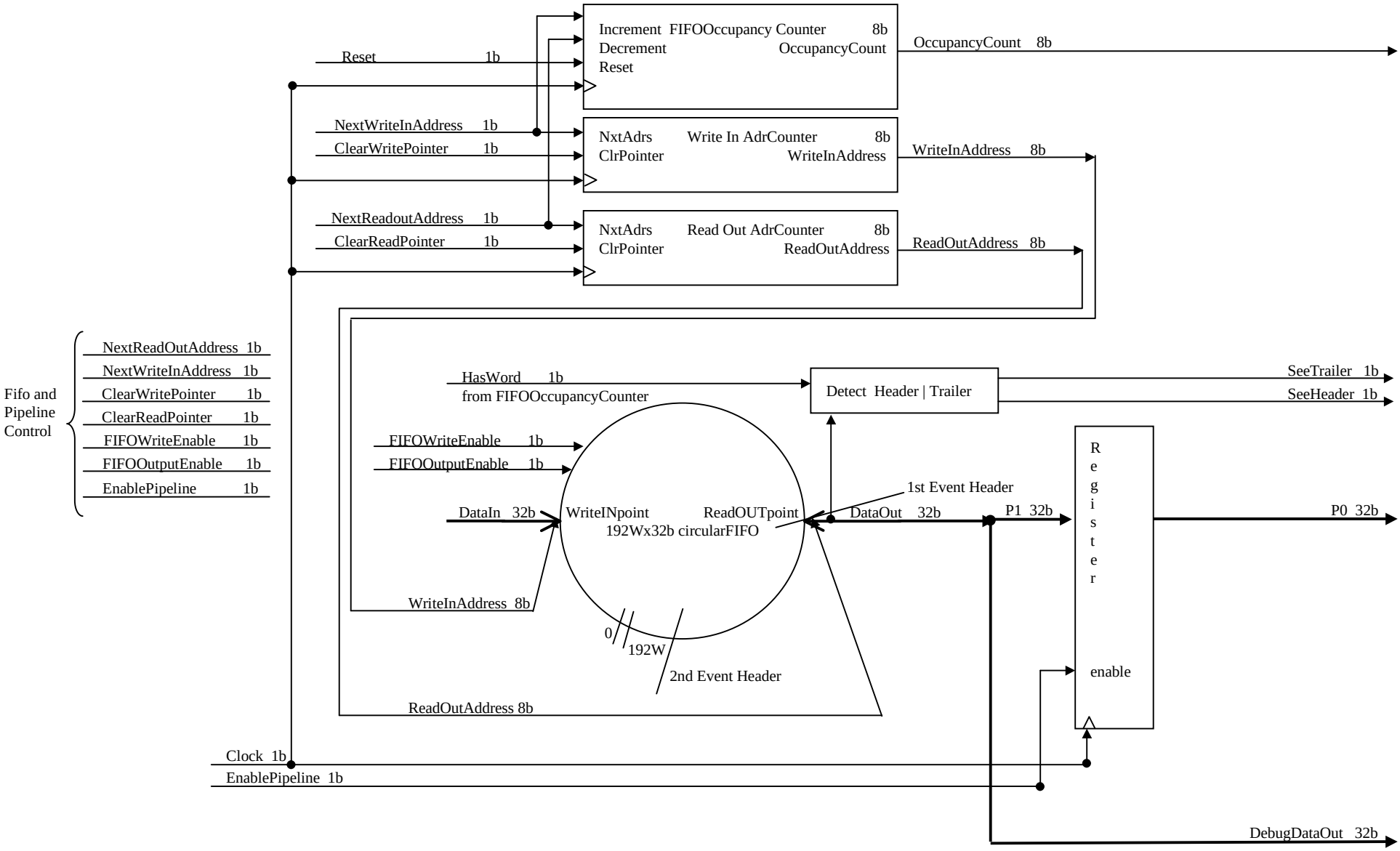

Model #2 Formatter FPGA: 192Word Circular FIFO

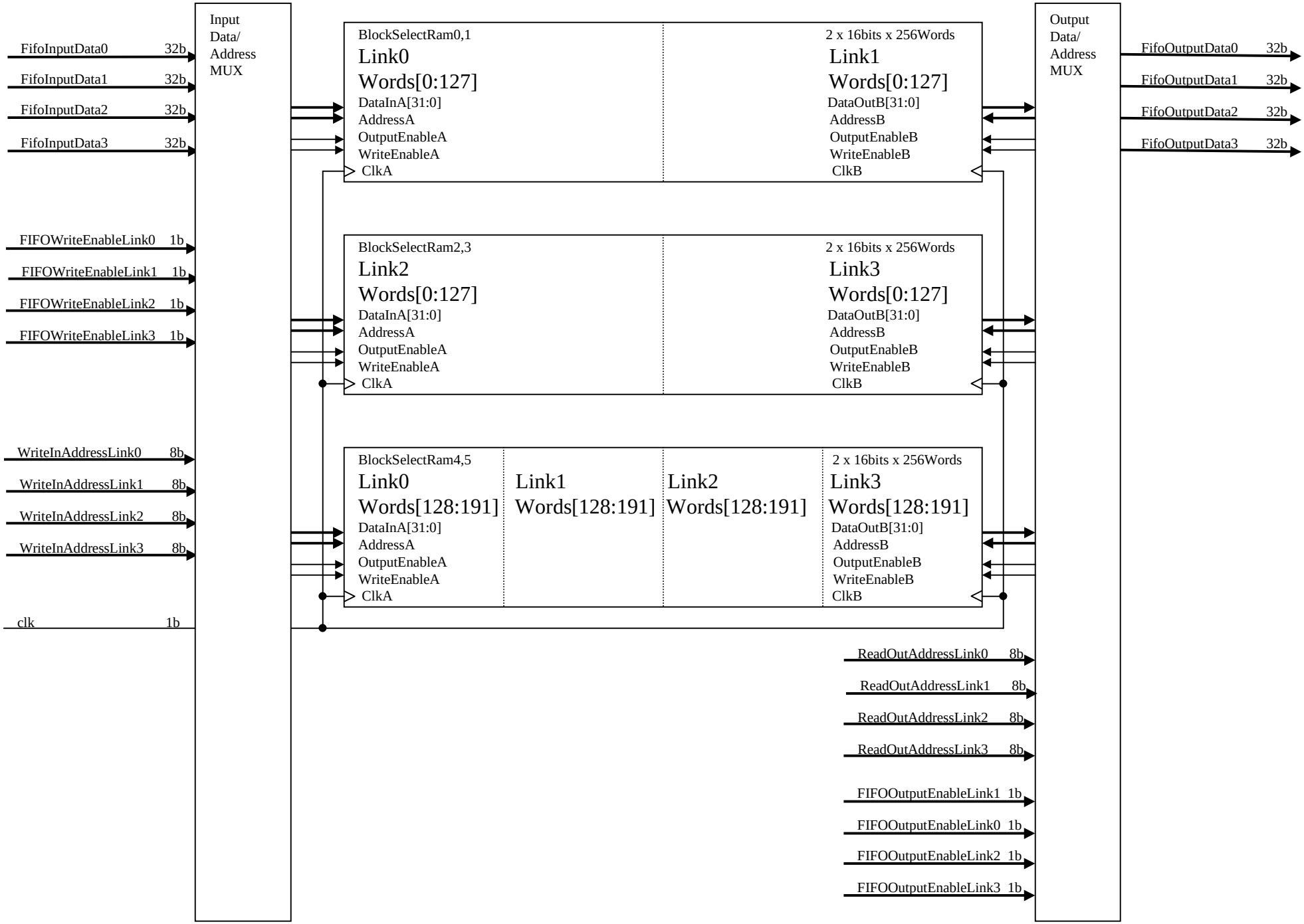

Model #2 Formatter FPGA: Token Manager

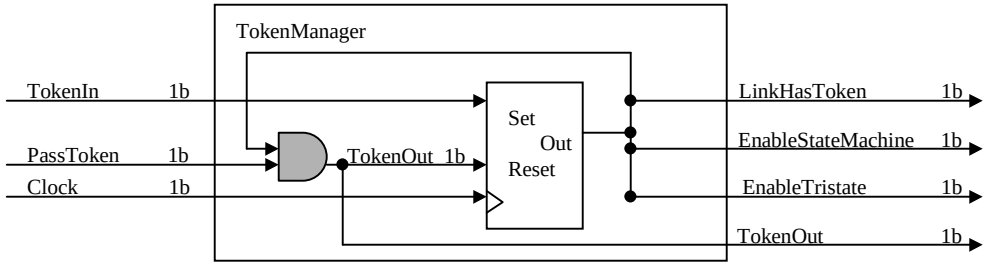

Model #2 Dual EventFragmentBuilder

Note: XCV200fg-5 2352 14

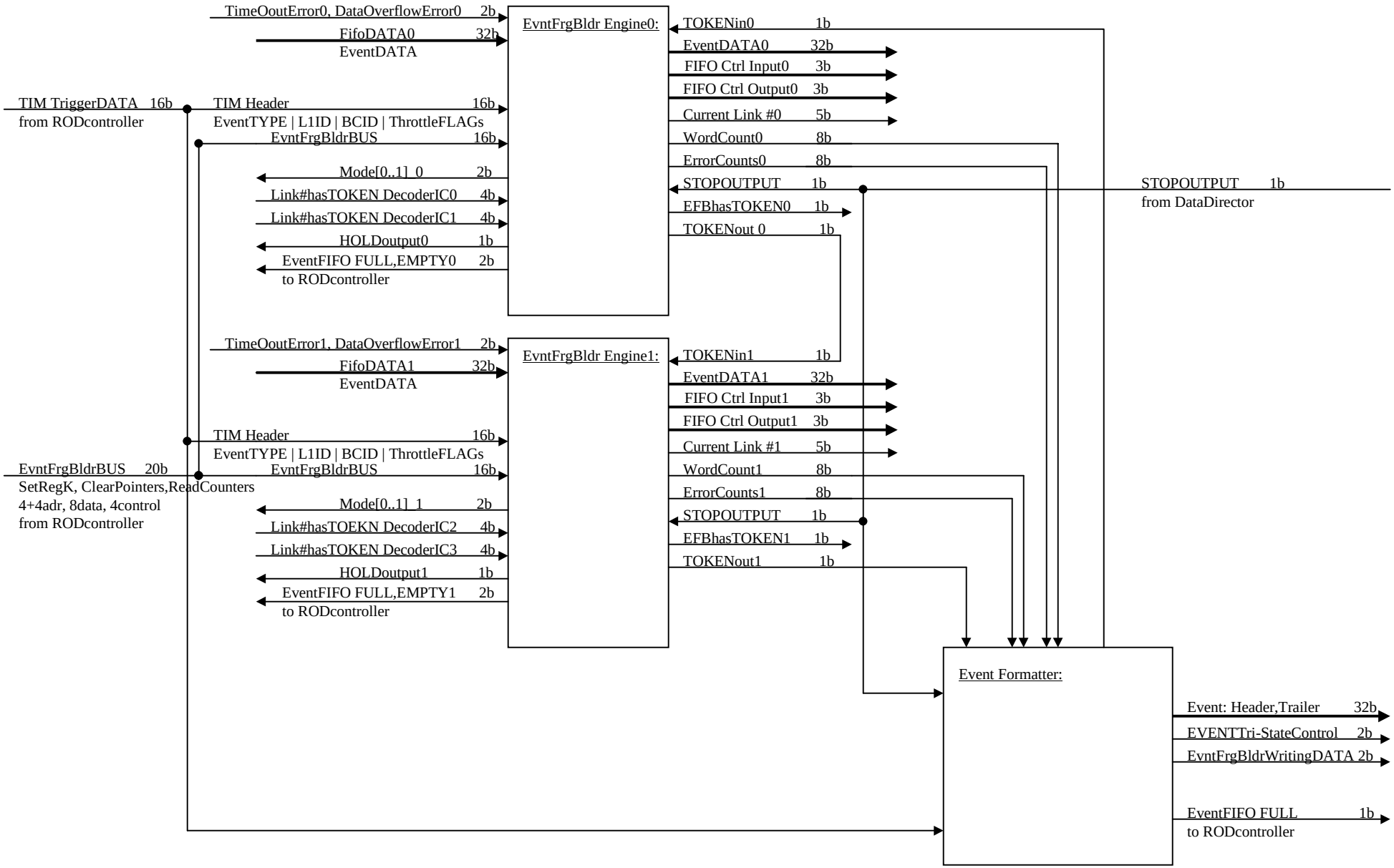

Model #2 GathererEngine preliminary

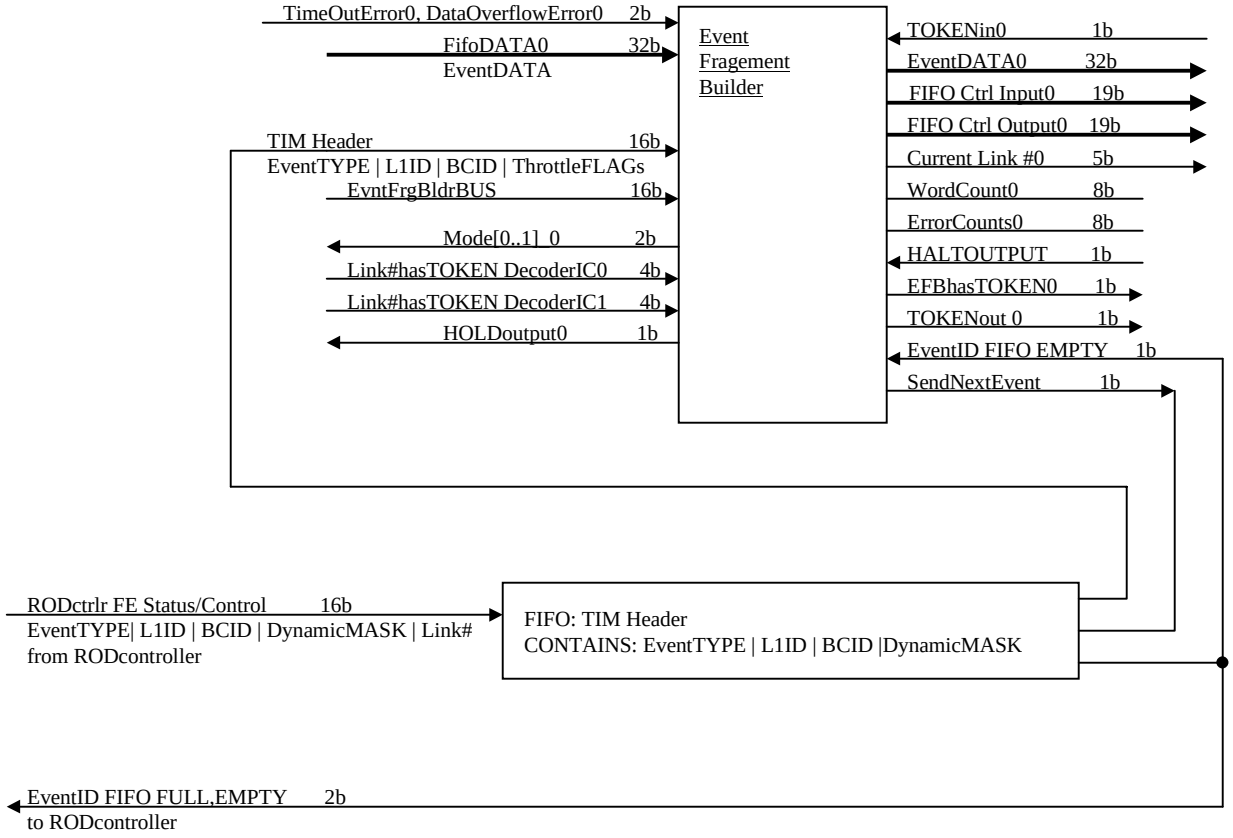

Model#2 Event Fragment Builder Engine

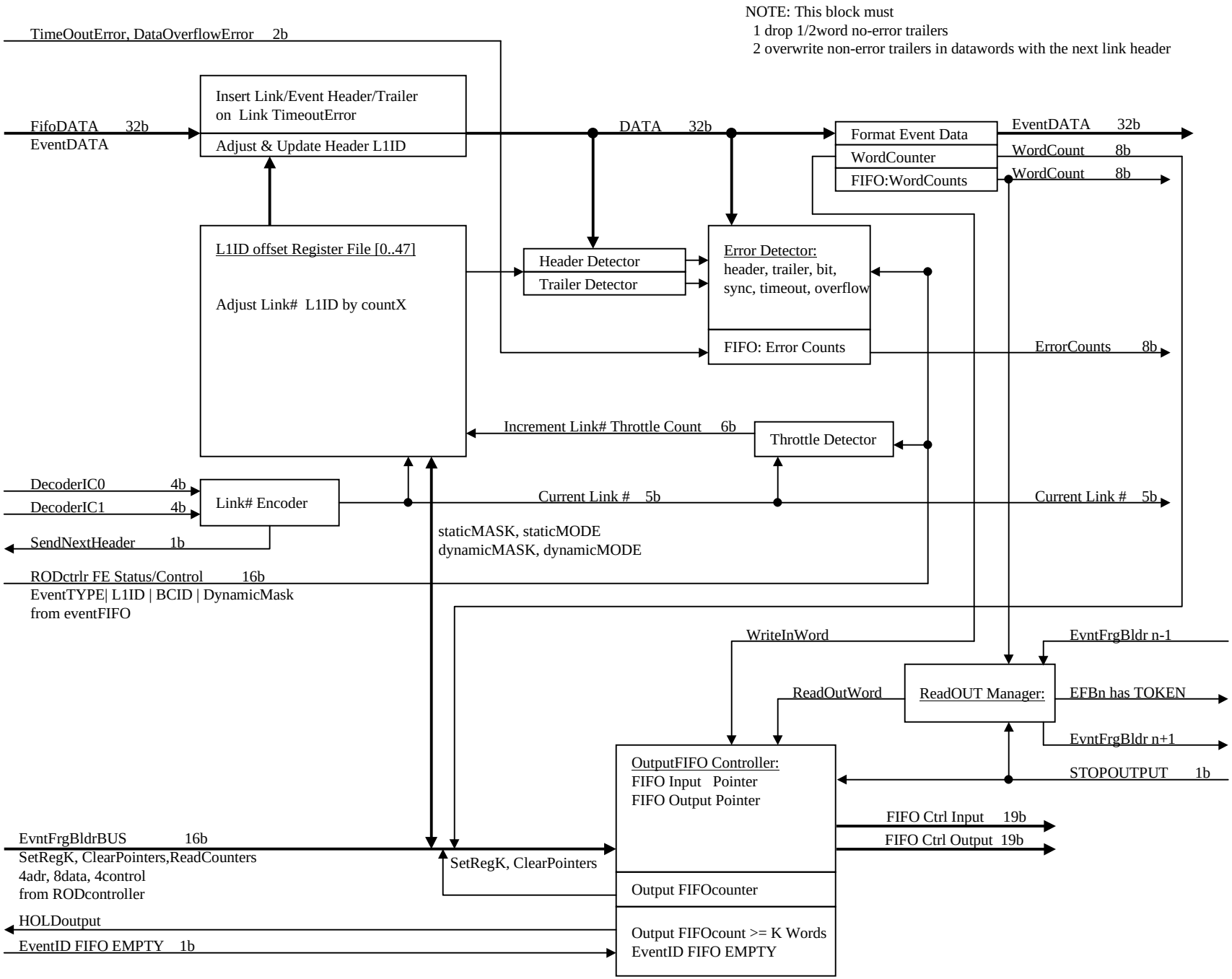

Model #2 EventFormatter

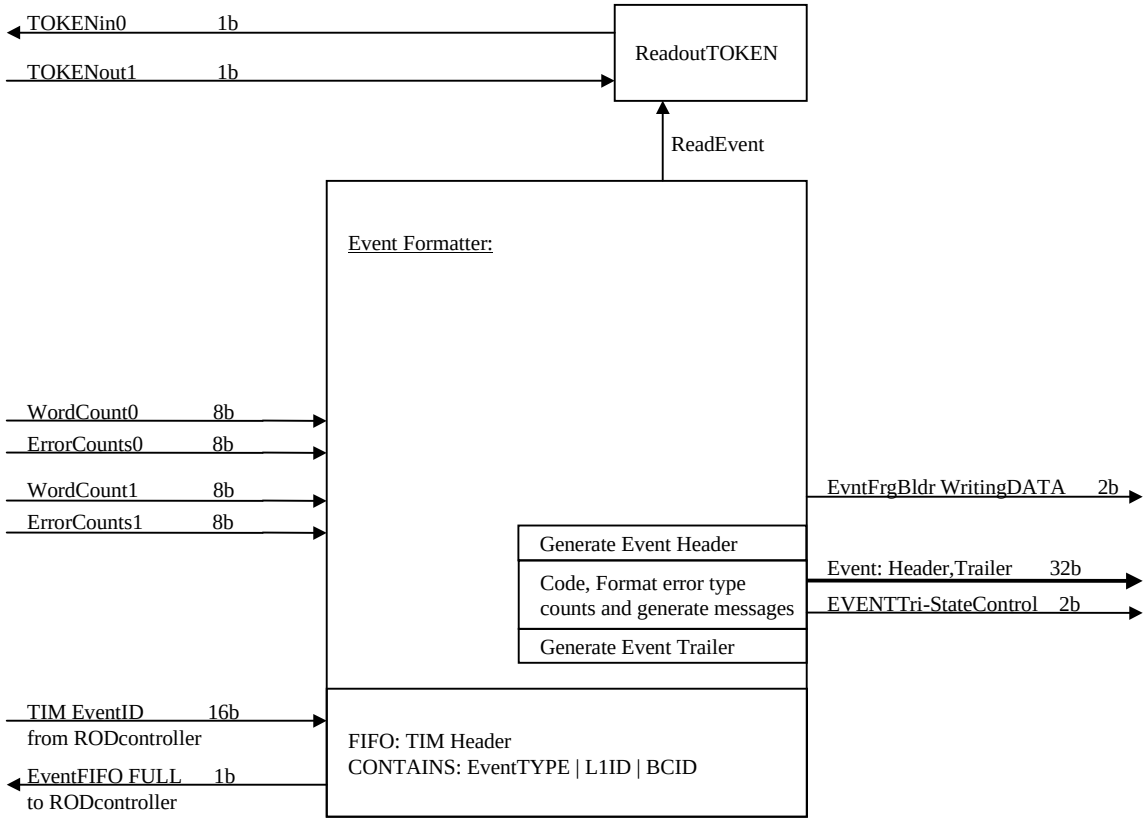

Model#2 Router

Note: XCV200fg-5 2352 14

For 512 word DSP fifos we need the XCV300fg-5 3072 16

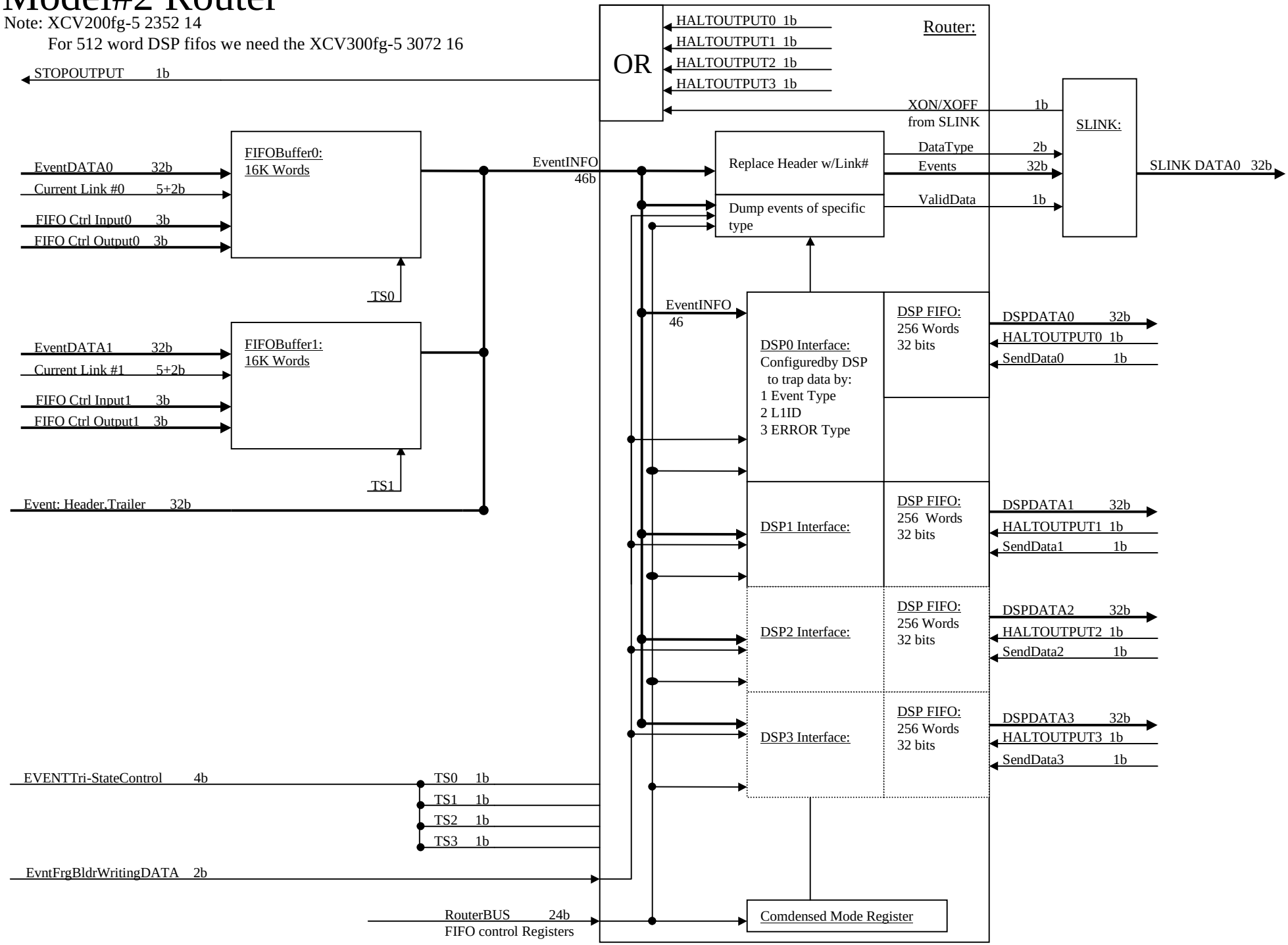

Model#2 Router: HeaderReplacer and DataDumper

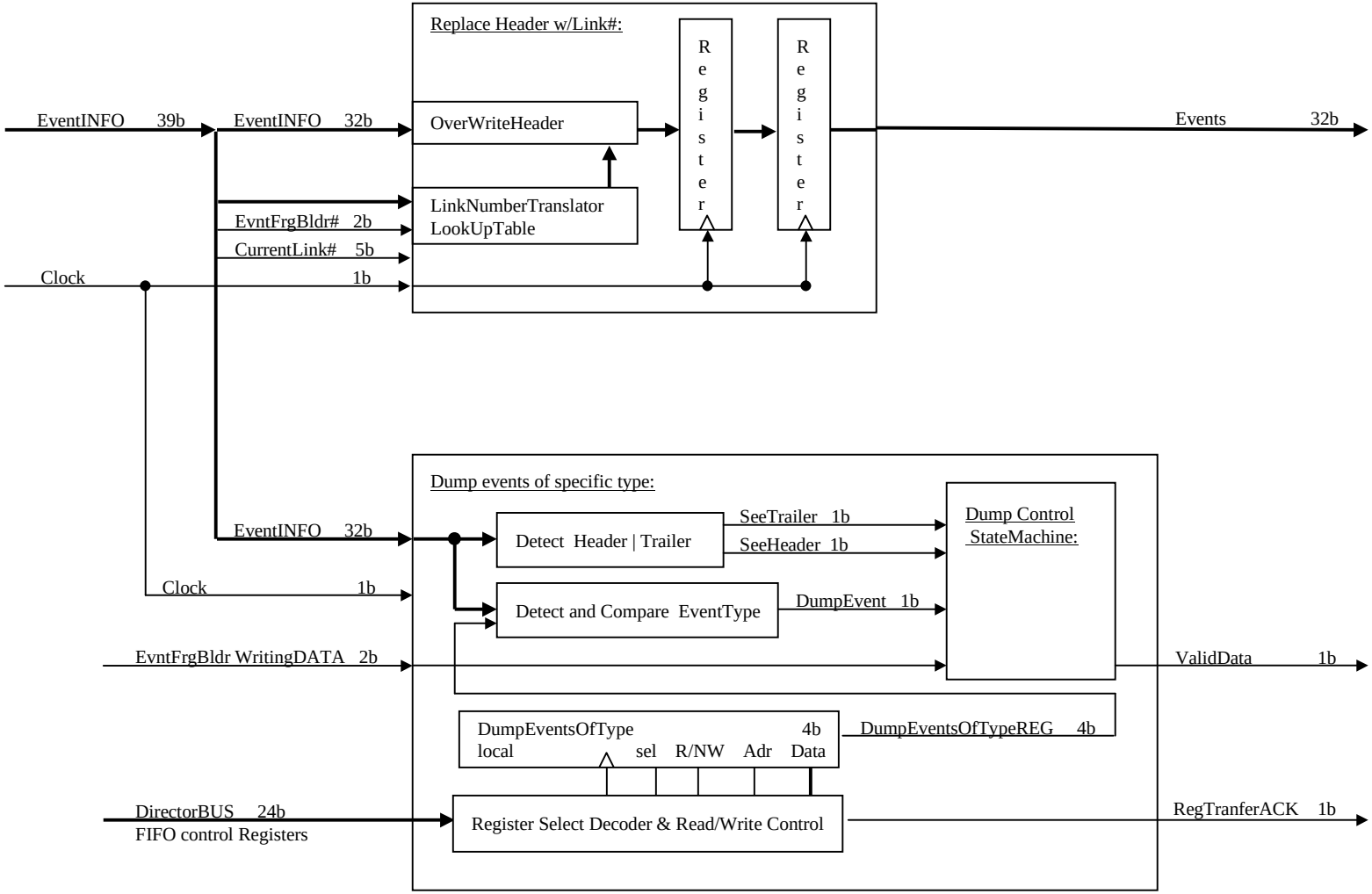

Model#2 Router: DSPInterface

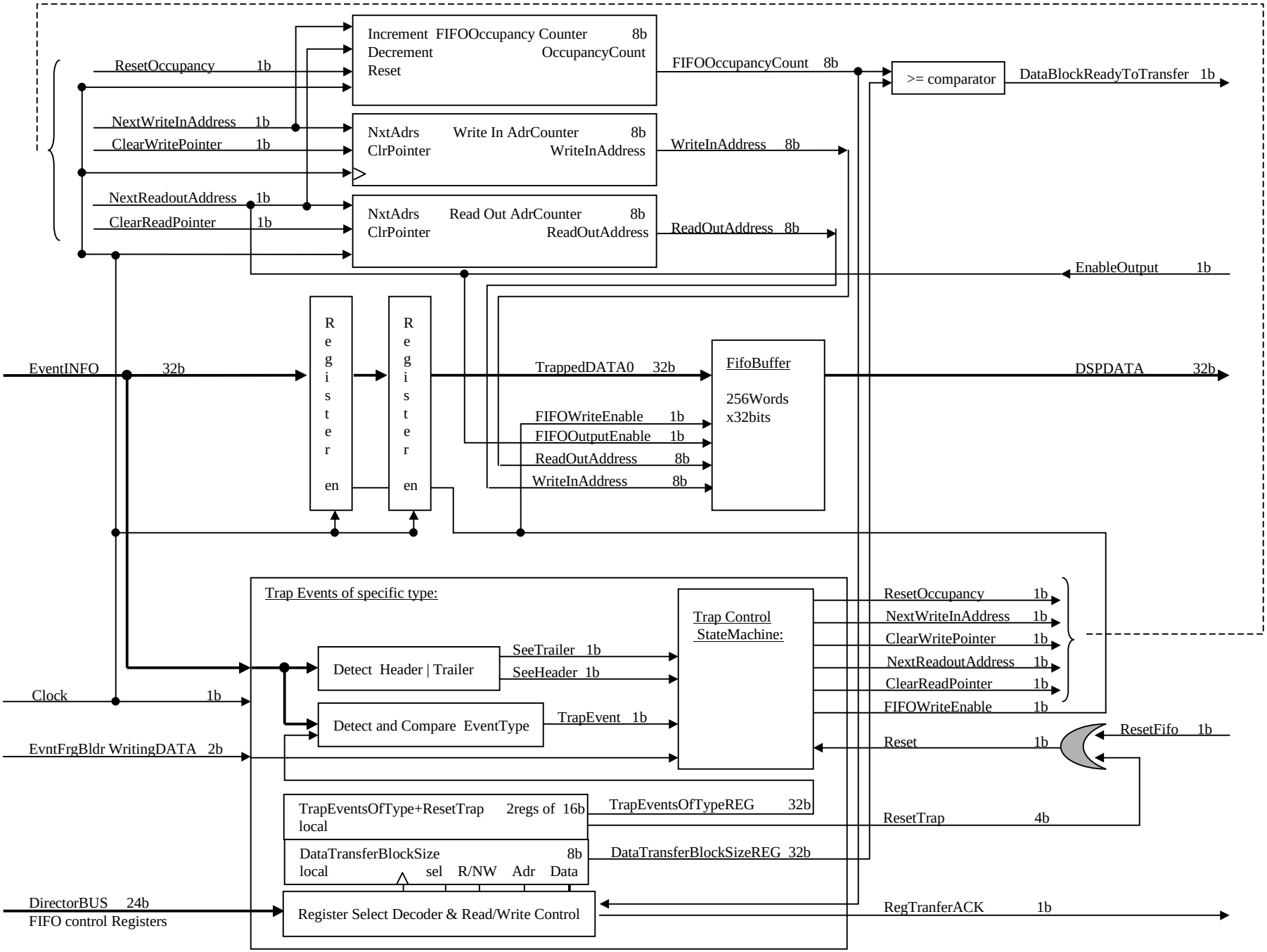

Model #2: ROD Controller Functional Block Diagram

Note: All bus size numbers indicate data bus size only, address and control signal have been omitted for clarity. XCV400fg-5 4800 20

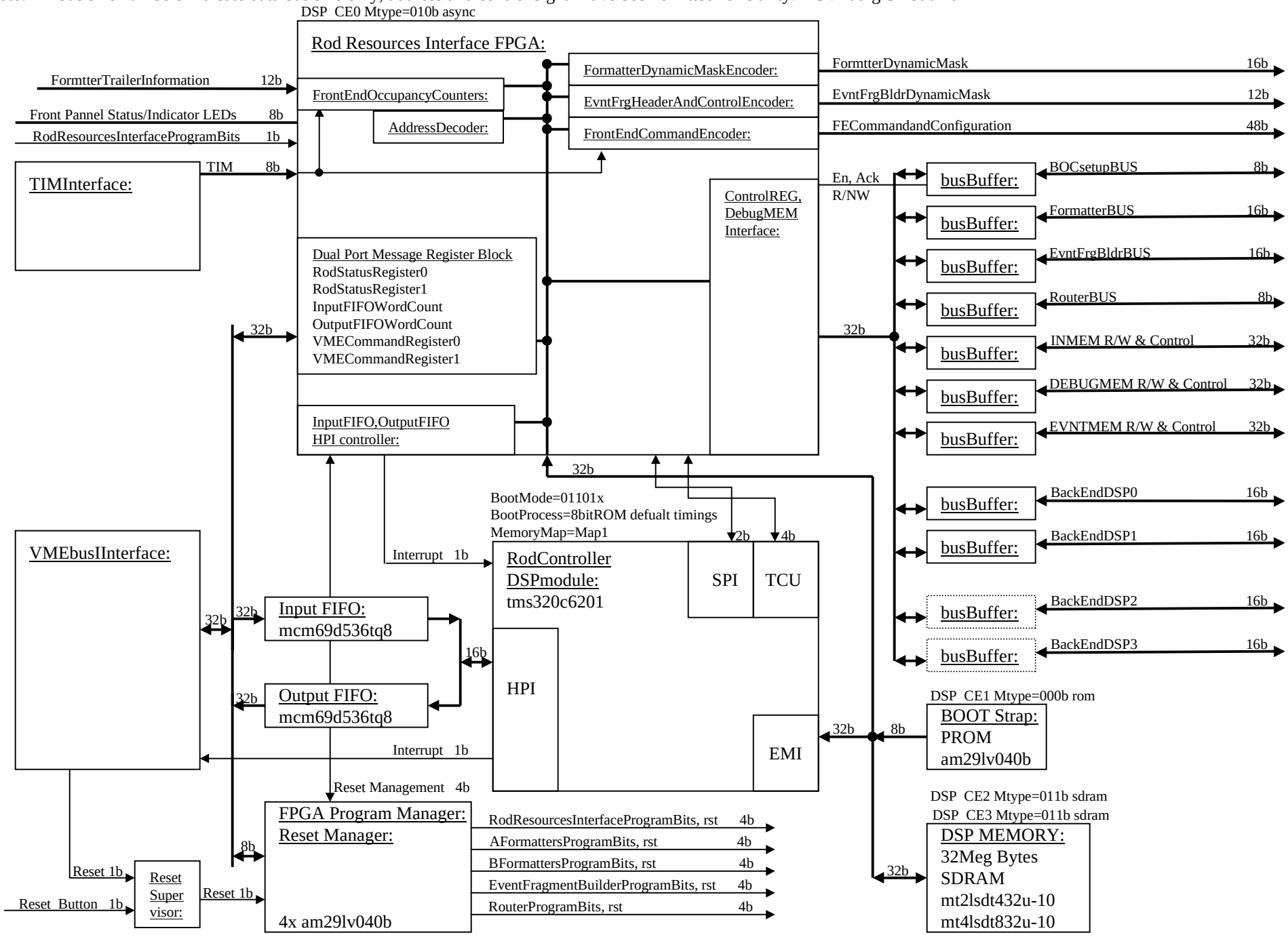

Model #2: Address Decoder/Mapper

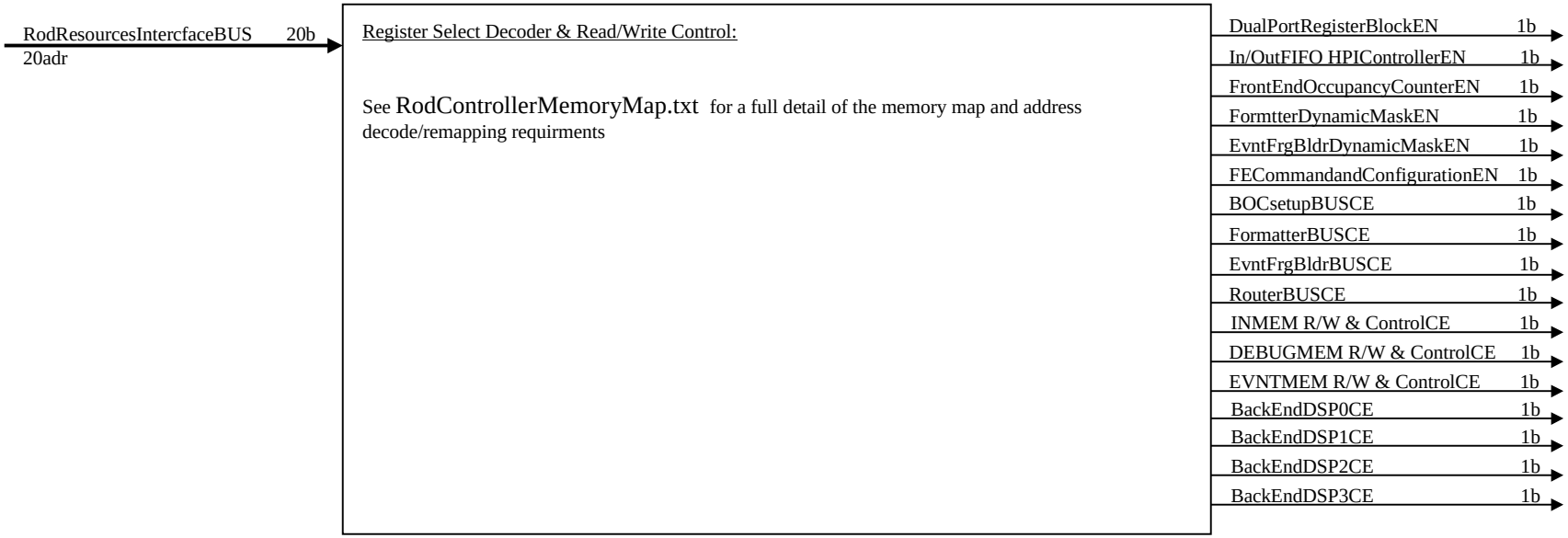

Model #2: Dual Port Register Block

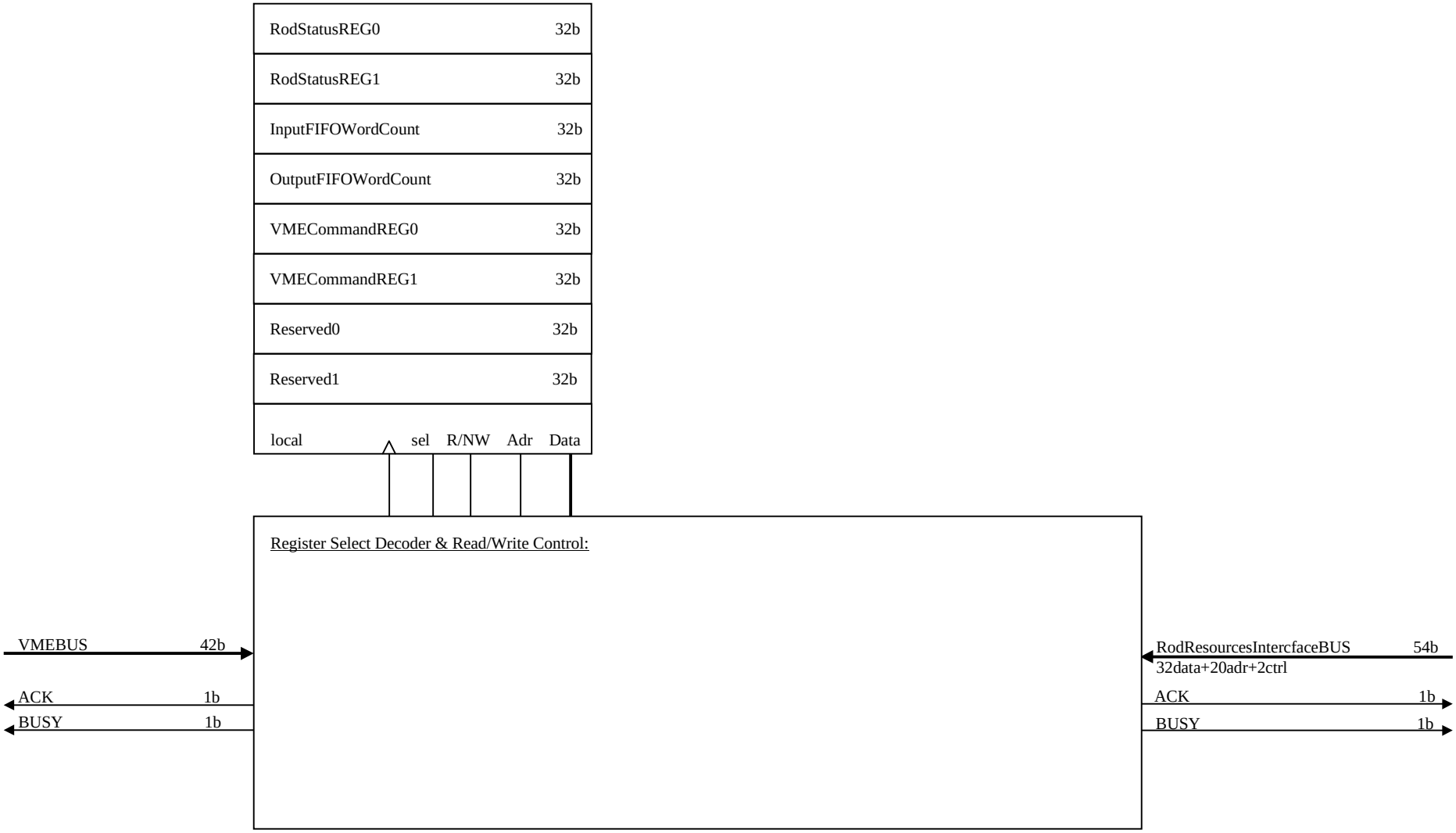

Model #2: InputFIFO, OutputFIFO HPI controller

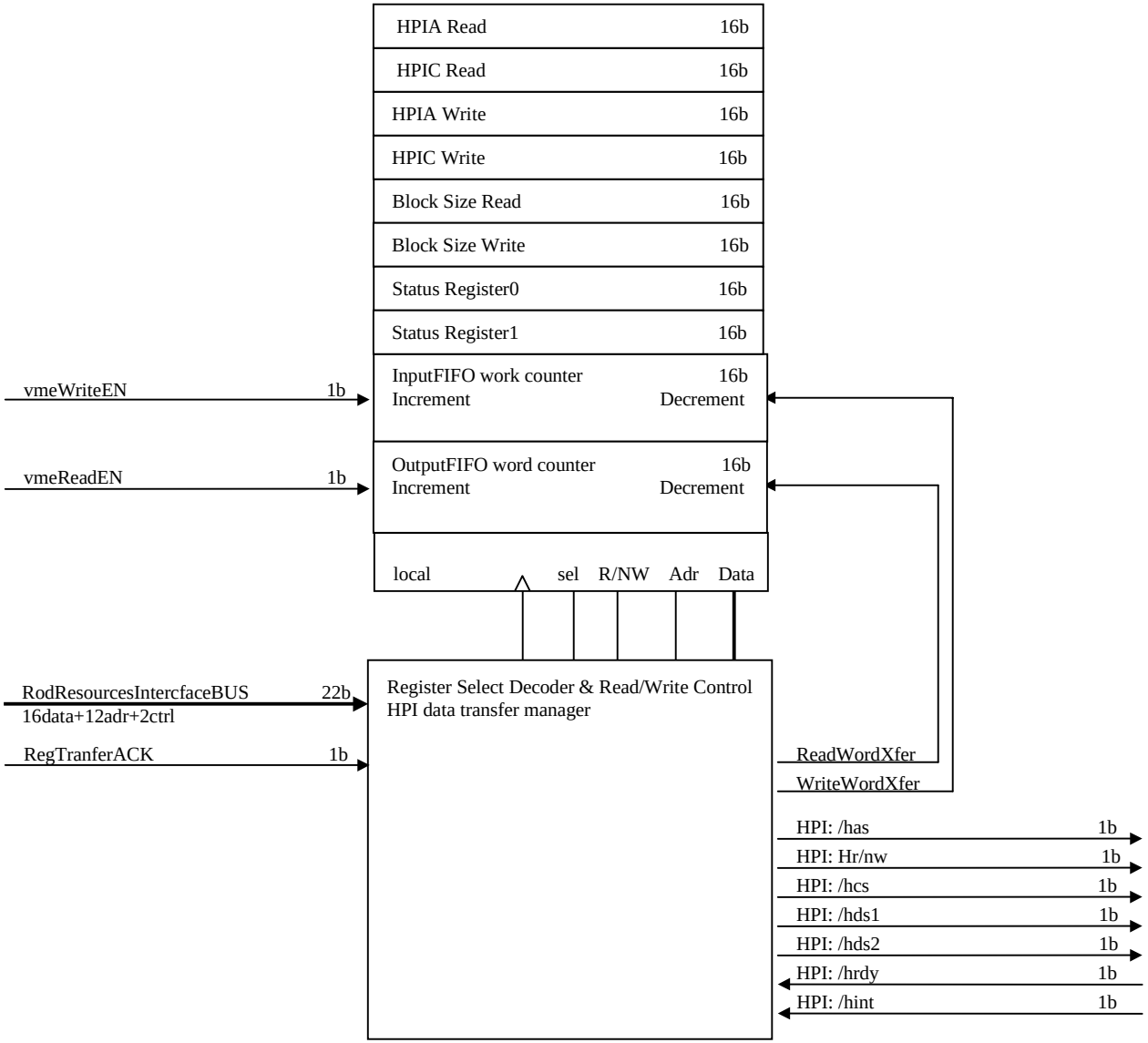

Model #2: BackEnd Slave DSP 1 of 4

Note: Board resources are available for 4 DSP modules. Due to cost, only 2 are loaded.

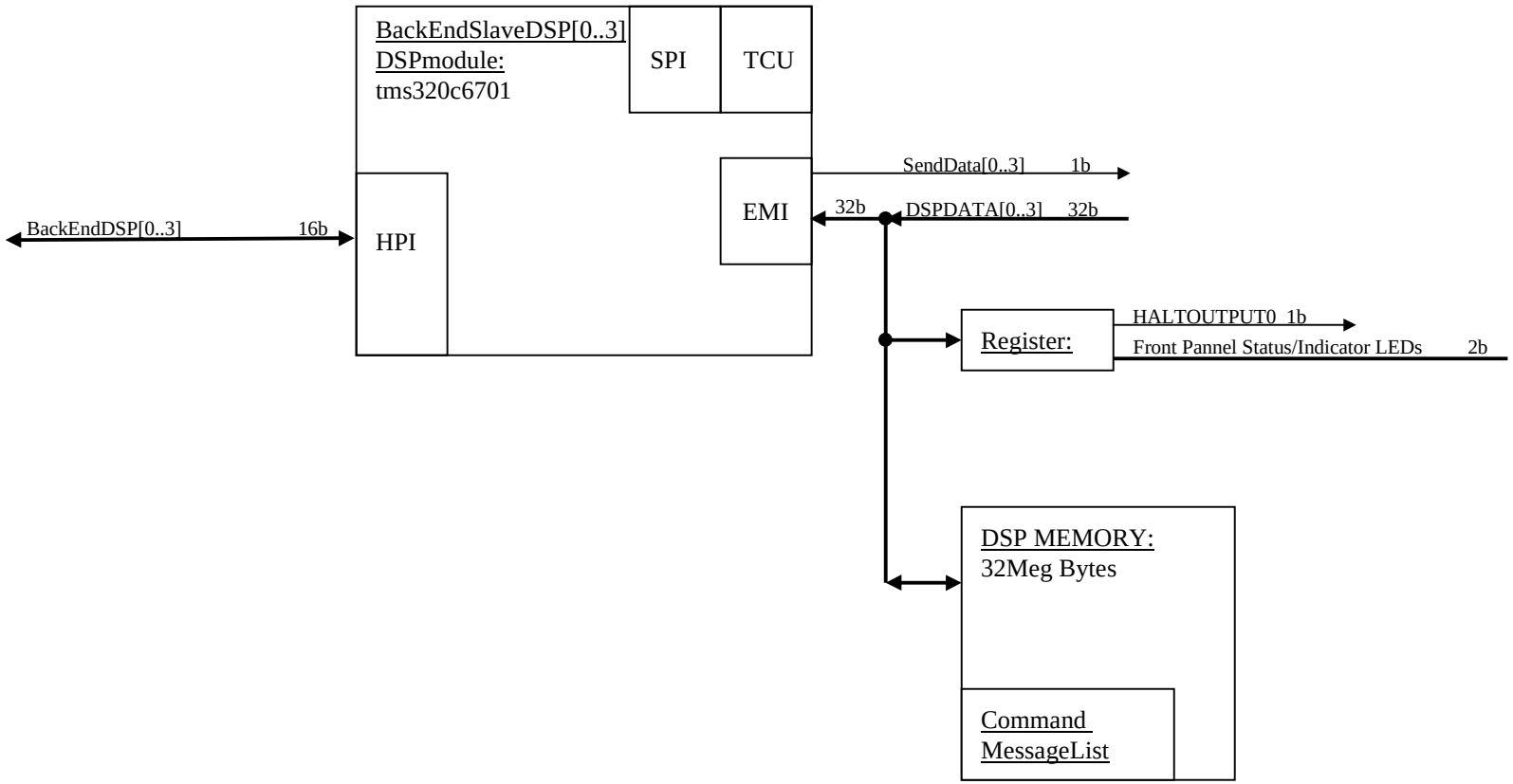

Model#2 RODController: Formatter and EFB Dynamic Mask Encoders

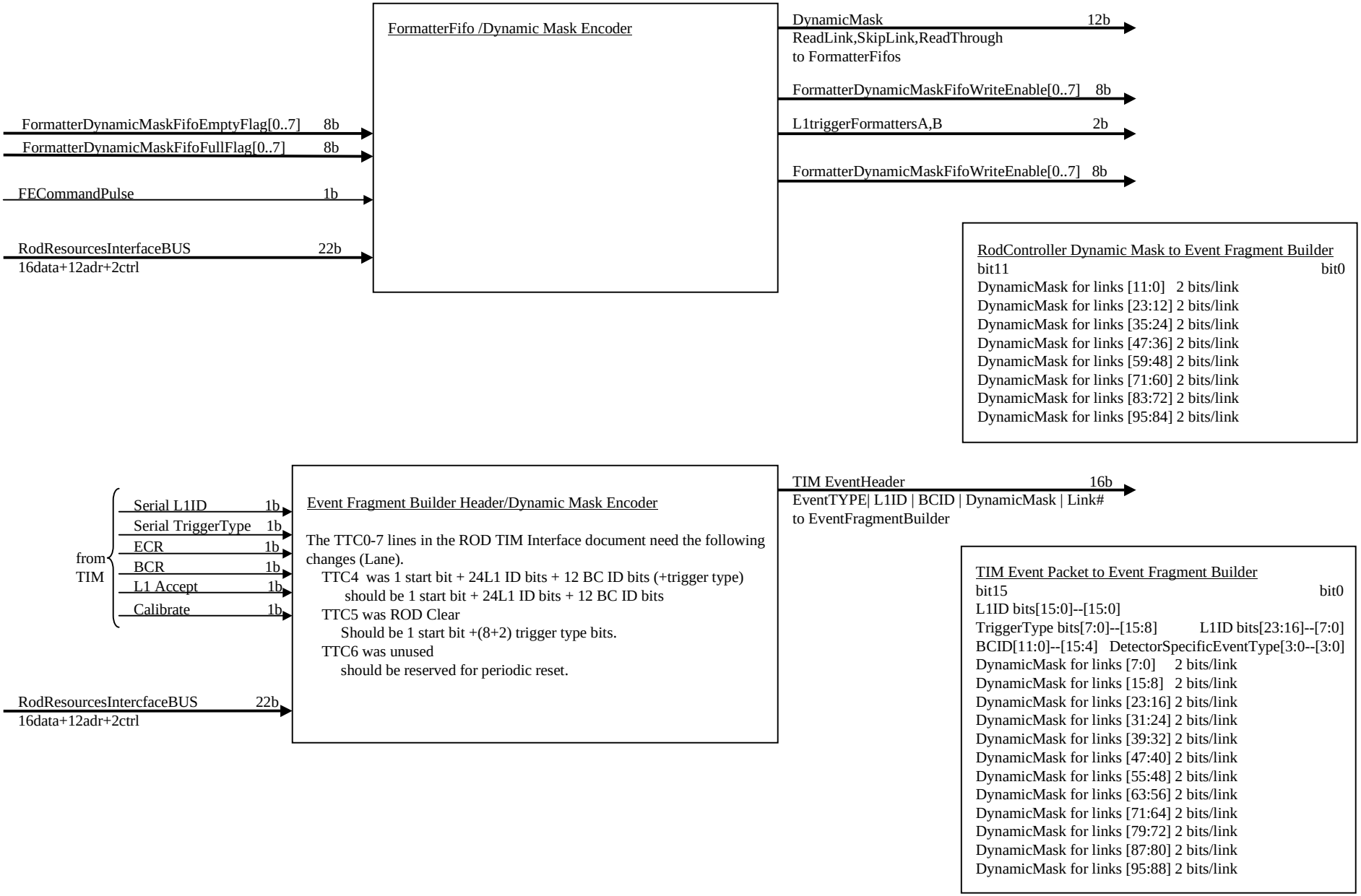

Model#2 RODController: FormatterFifo Dynamic Mask Encoder

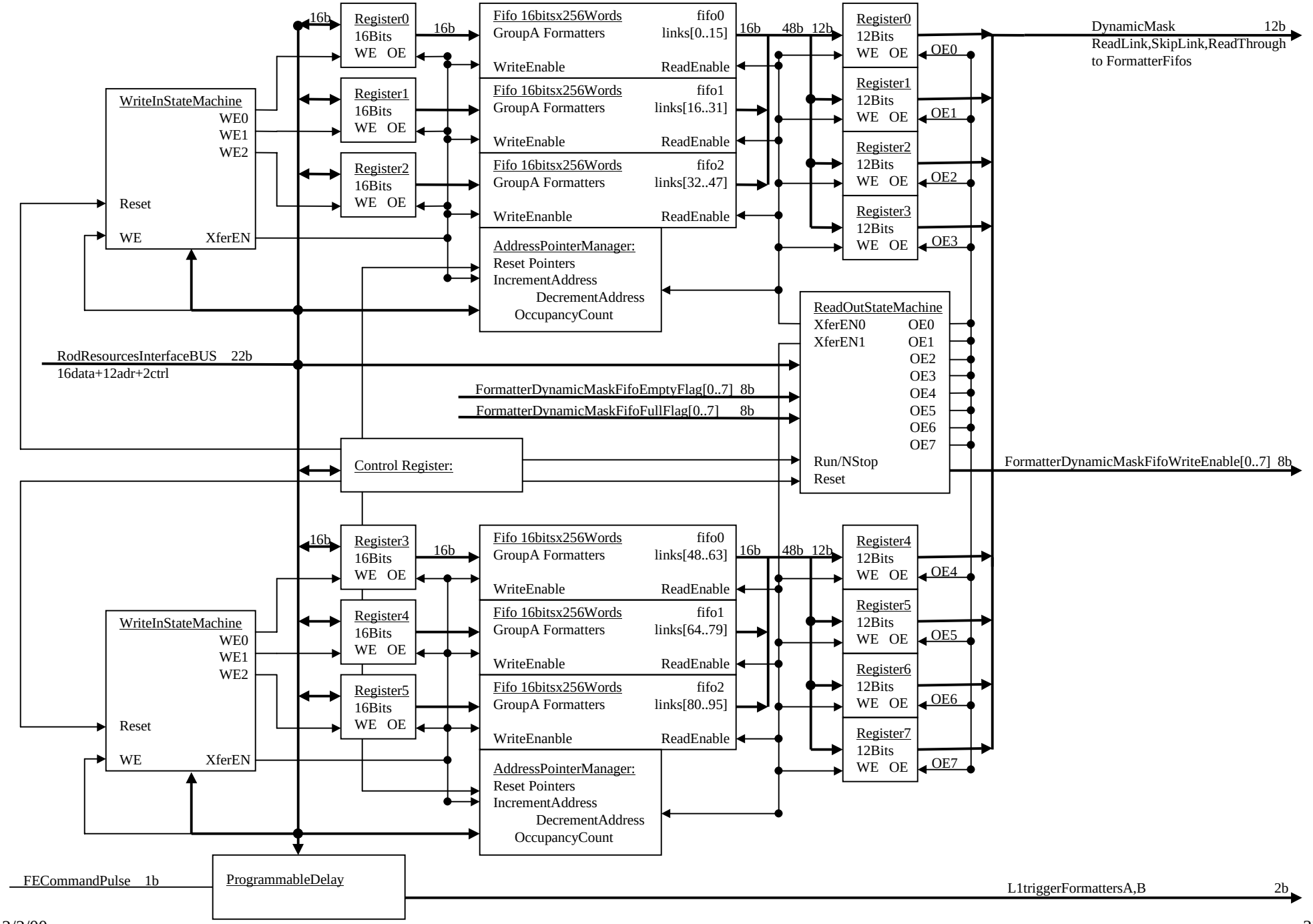

Model#2 RODController: EFB Header/Dynamic Mask Encoder

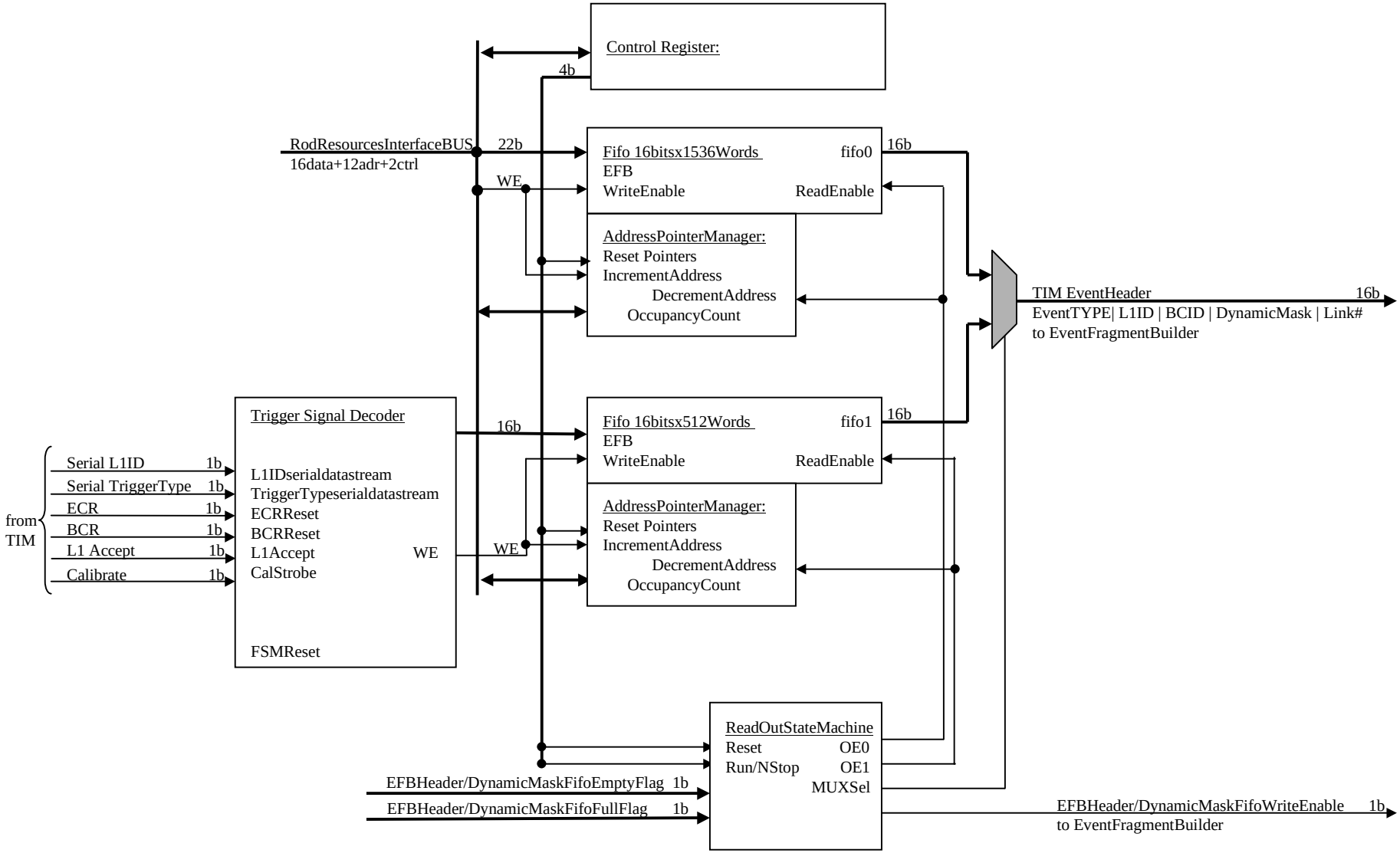

Model#2 RODController: Front End Occupancy Counters

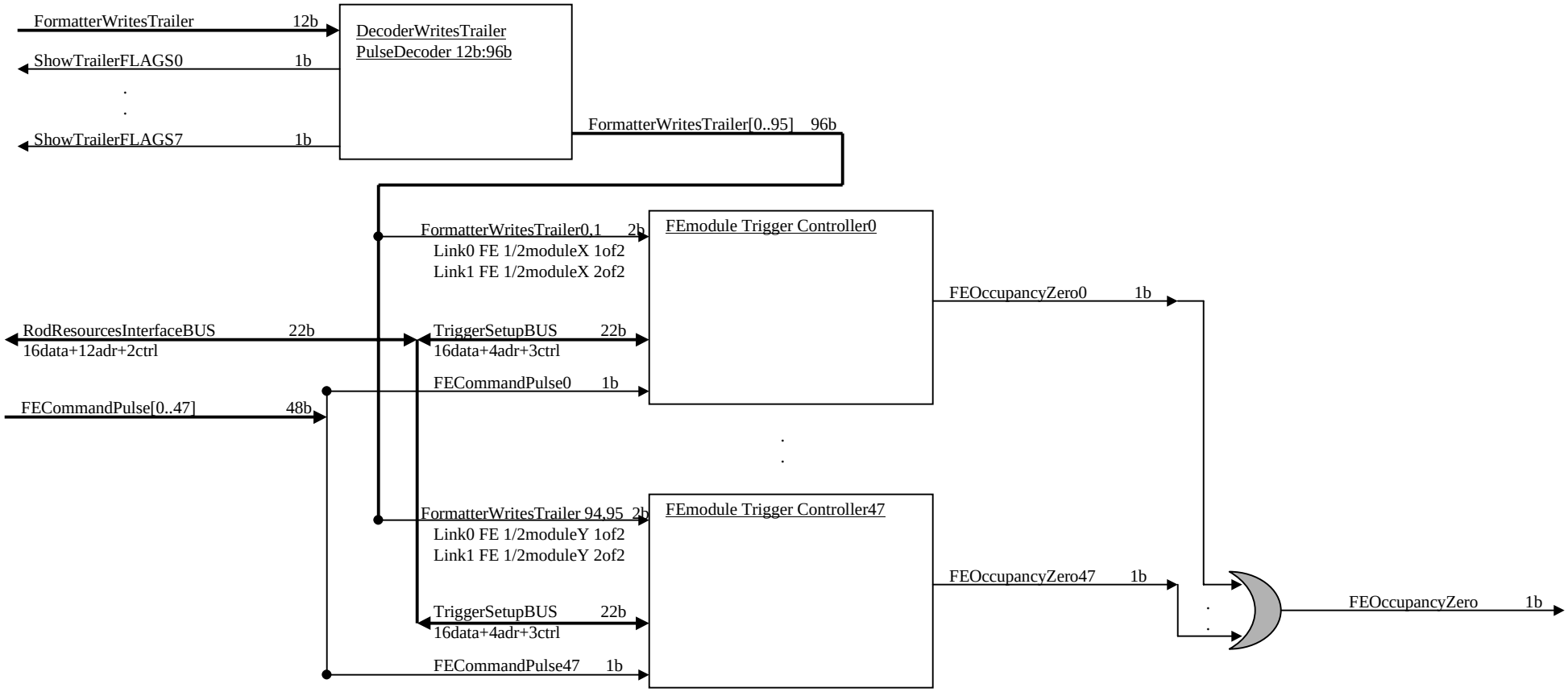

Model#2 RODController: FETrigger Counter

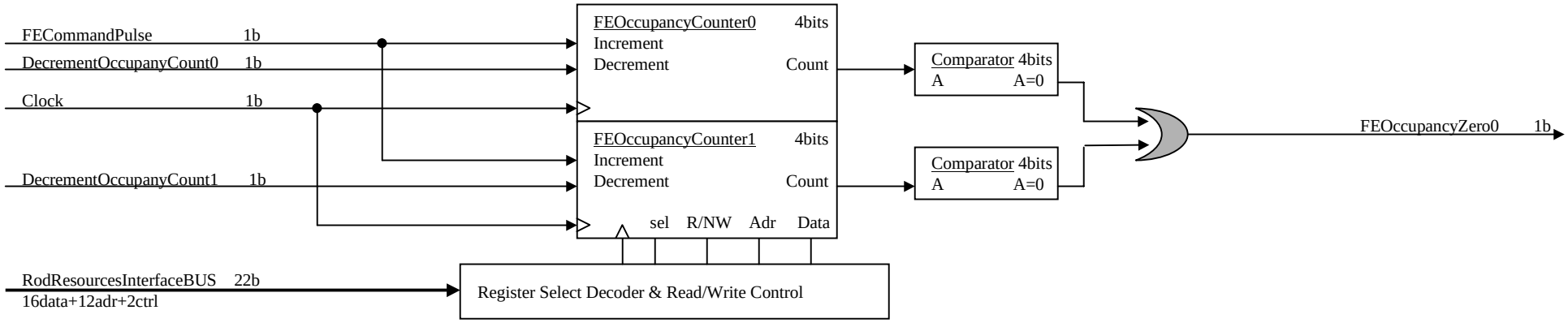
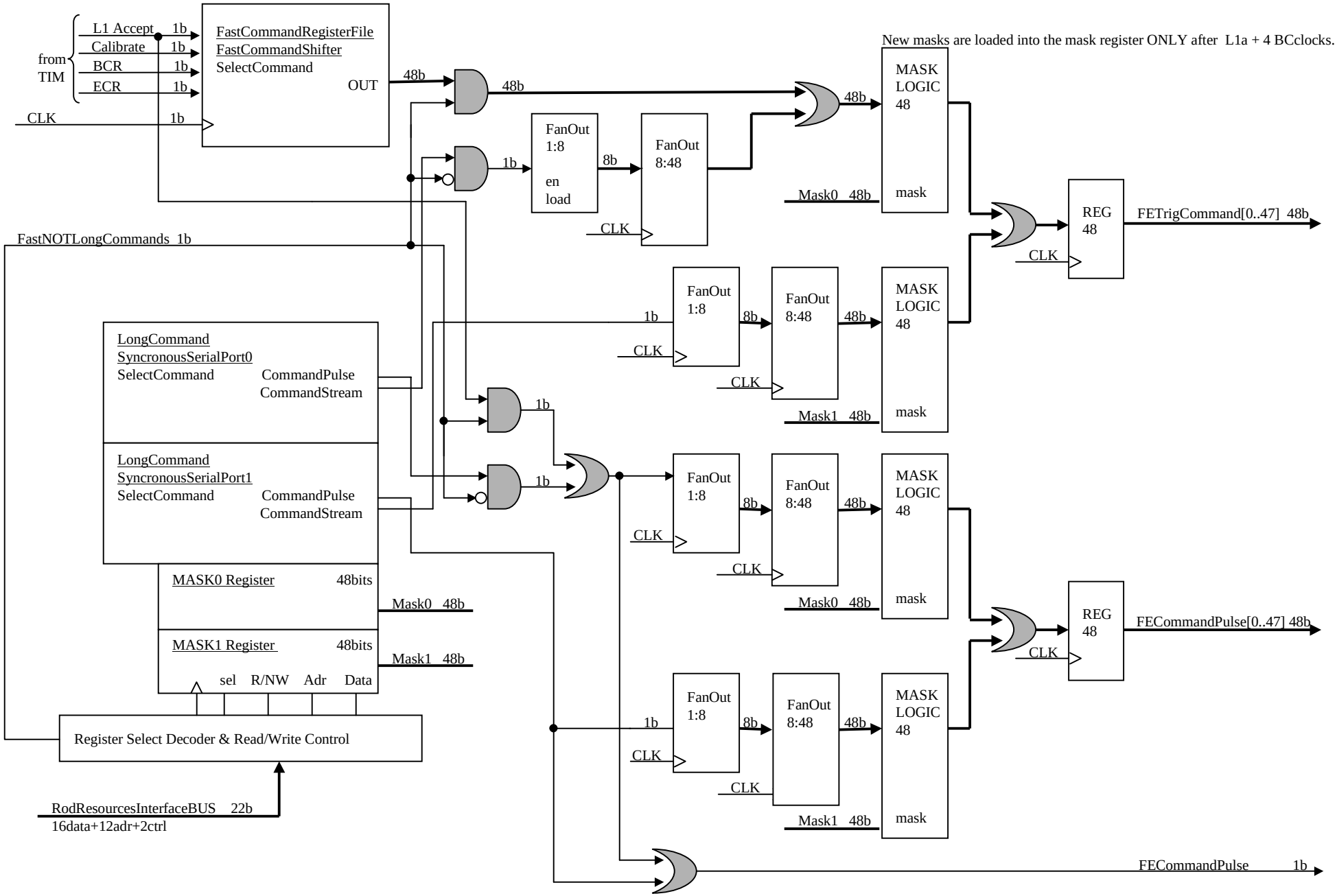
Model#2 RODController: FETriggerCommands